LIBELLULA 1-2”

SELF PRIMING DIAPHRAGM PUMP

IT – CATALOGO RICAMBI

EN – SPARE PARTS LIST

FR – LISTE DES PIECES DE RECHANGE

Caffini PUMPS
place & forget

GEAR BOX ASSEMBLY

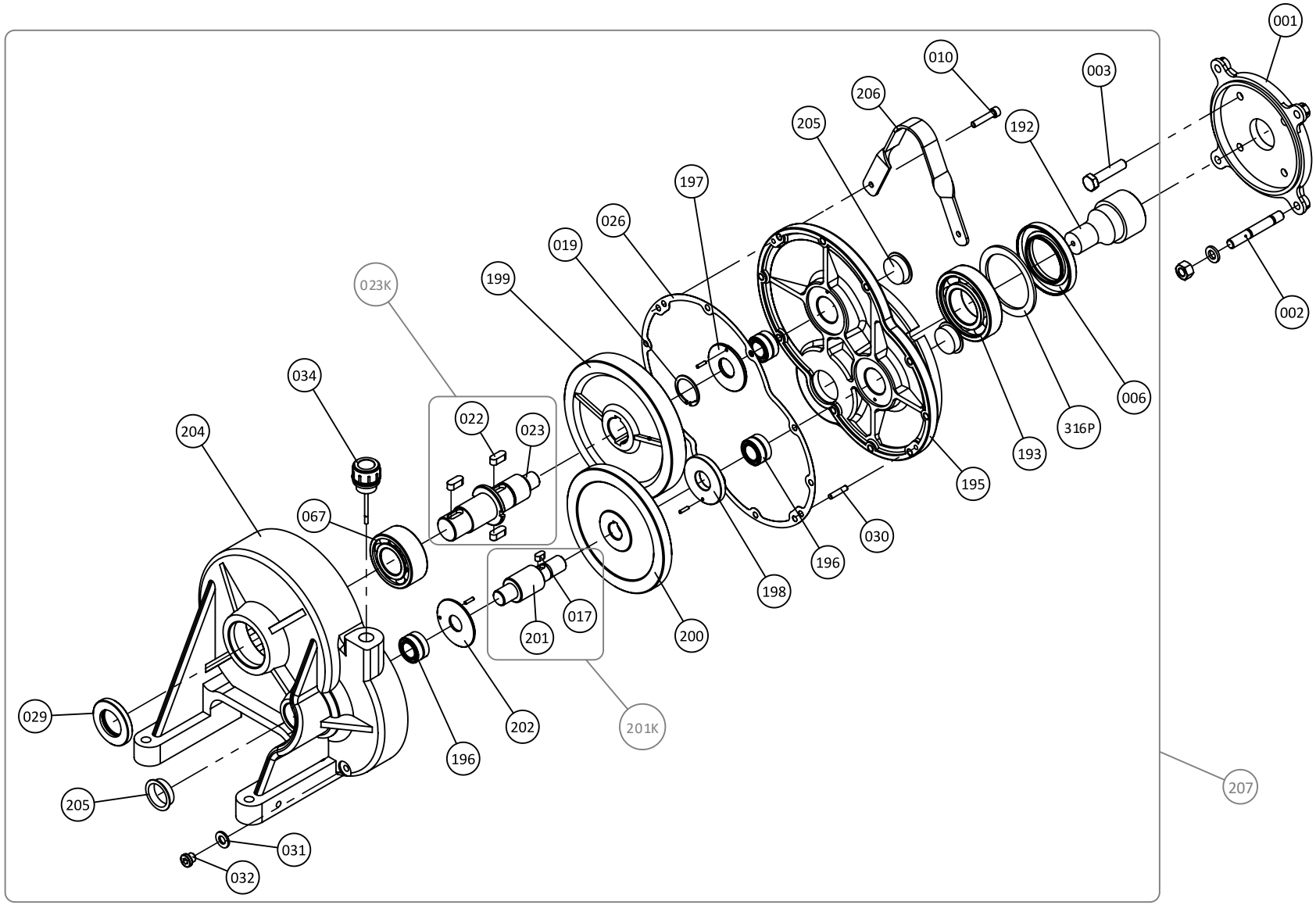

NON-WETTED PARTS ASSEMBLY

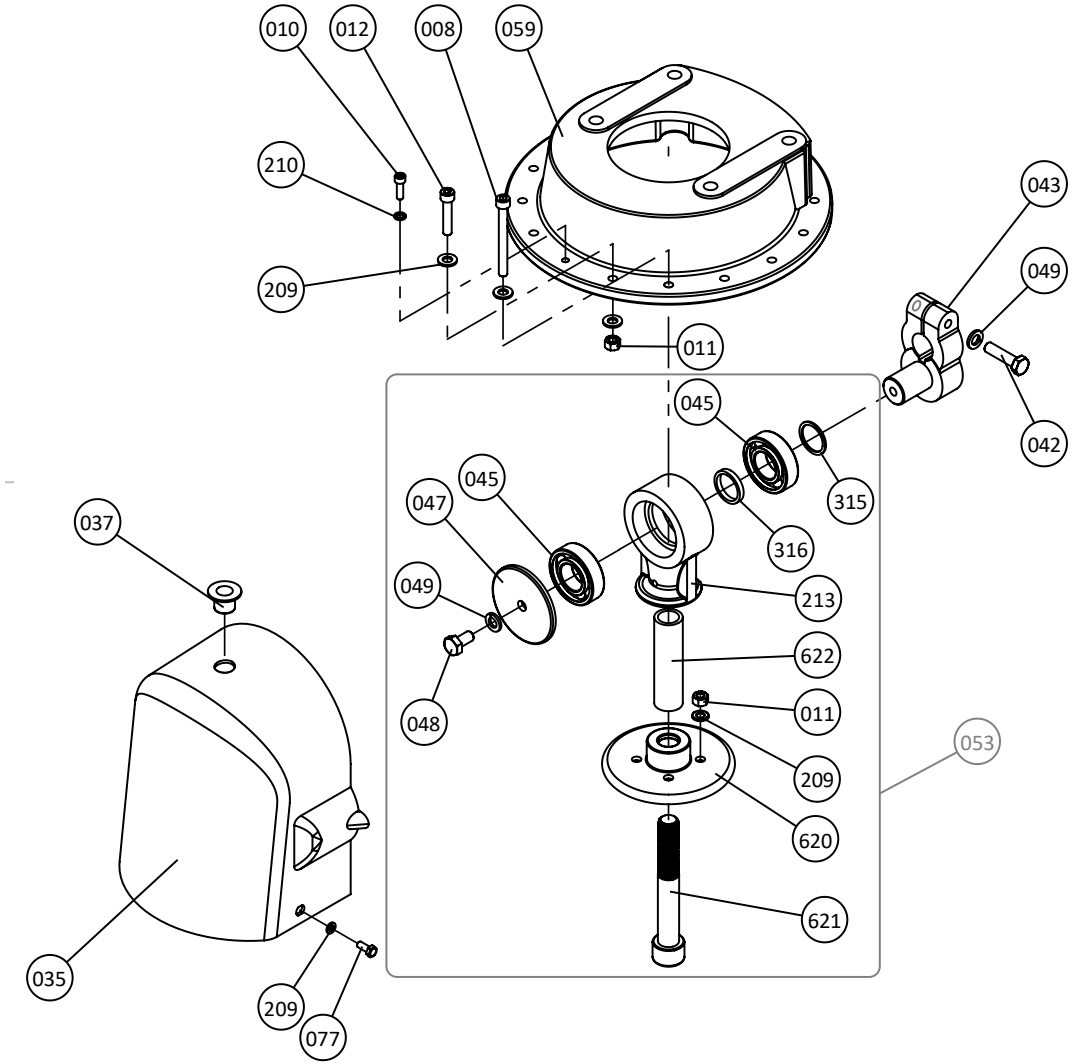

WETTED PARTS ASSEMBLY

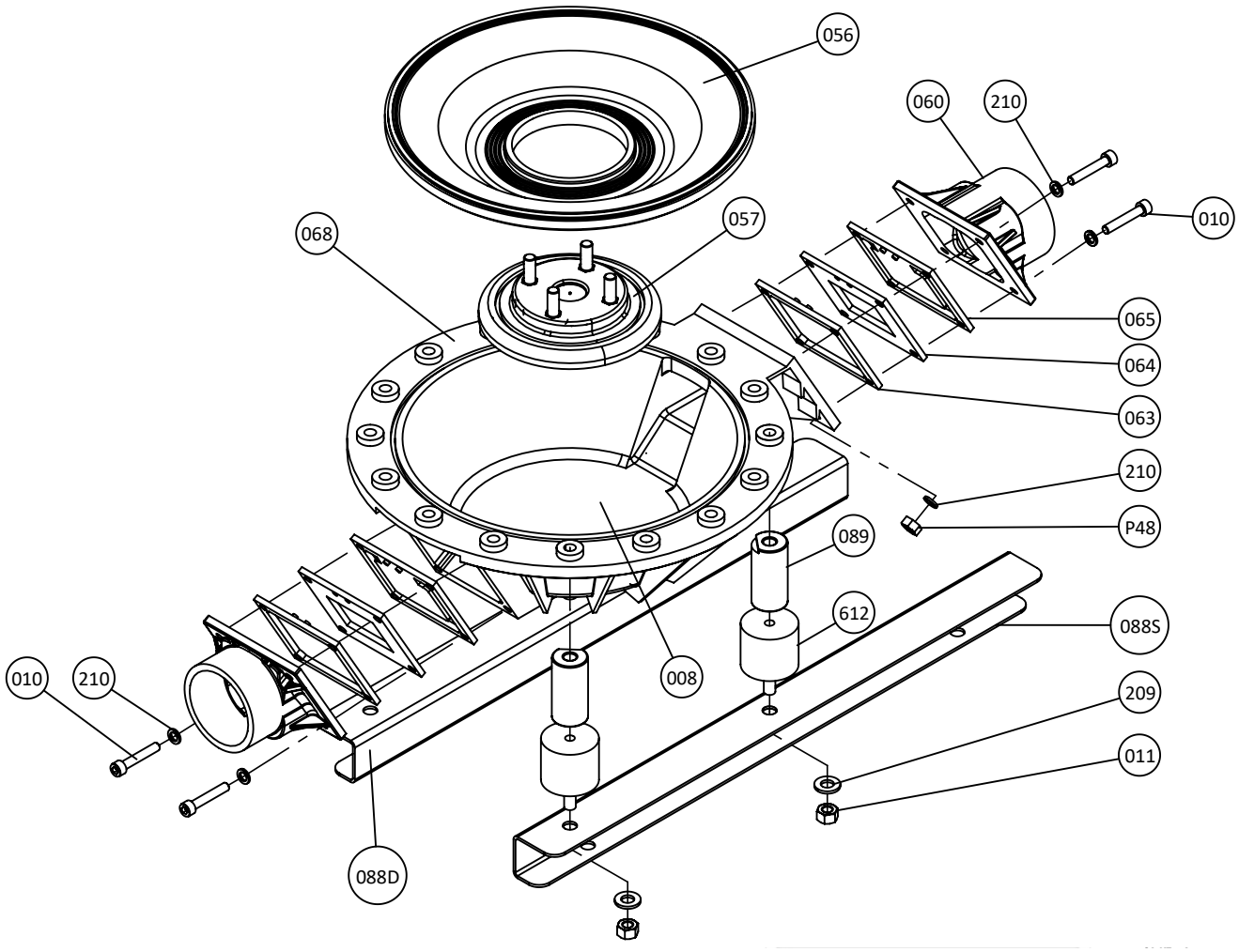

TRAILER ASSEMBLY FOR PETROL ENGINE AND ELECTRIC MOTOR

140L3020

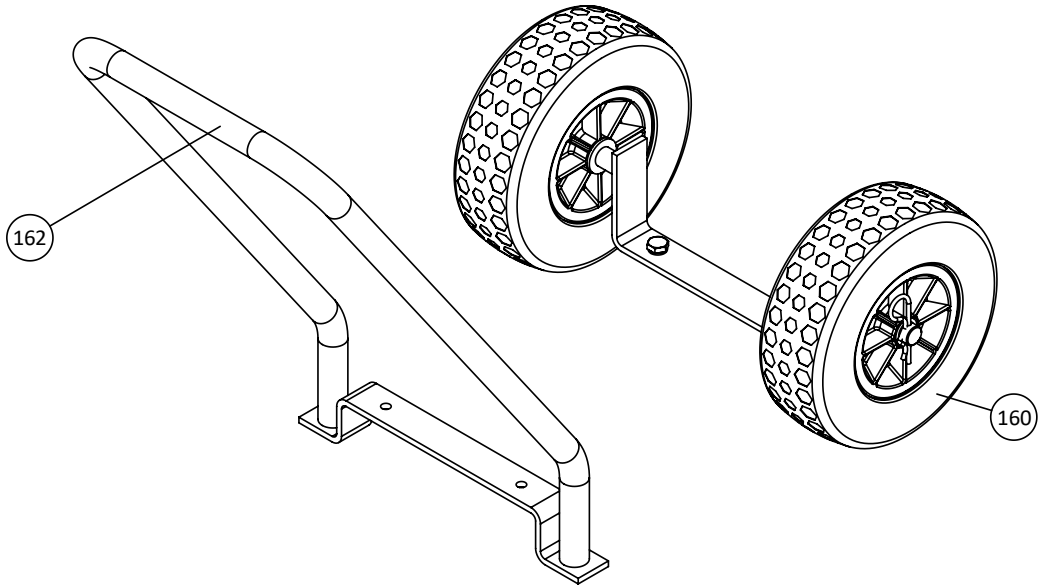

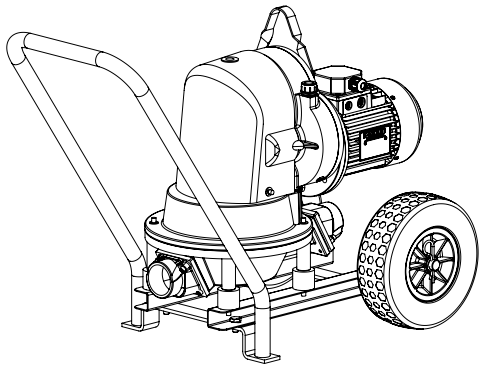

ACCESSORIES

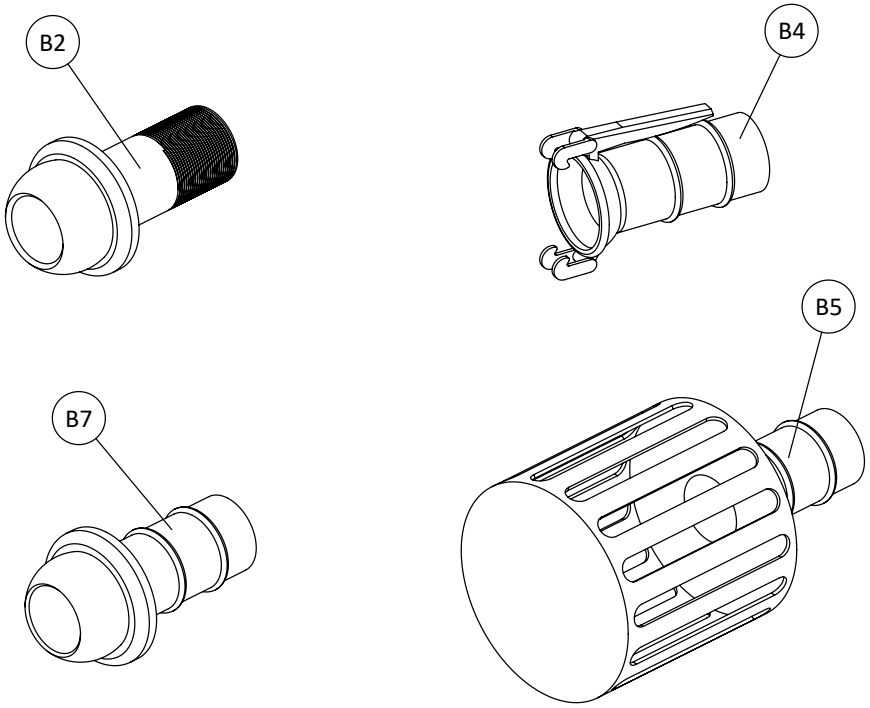

SPARE PARTS LIST

FIG	PART NUMBER	DENOMINAZIONE	DESCRIPTION	DESCRIPTION
001	001L1002	FLANGIA ACCOPPIAMENTO MOTORE	ADAPTER COUPLING ENGINE	BRIDE DE COUPLEMENT MOTEUR
002	002L0321U	PRIGIONIERI PER ACCOPPIAMENTO FLANGIA	SCREWS FOR FLANGE COUPLING	GOUJONS POUR COUPLEMENT BRIDE
003	003L0234	VITE PER ACCOPPIAMENTO FLANGIA	STUD FOR FLANGE COUPLING	VIS POUR COUPLEMENT BRIDE
006	006L5061	ANELLO TENUTA	OIL SEAL RING	JOINT
008	770P008	VITE	BOLT	VIS
010	010L02102	VITE	BOLT	VIS
011	551M90511	DADO FISSAGGIO	NUT	ECROU
012	770P012	BULLONE	SCREW	BOULON
017	017L08171	CHIAVETTA ALBERO 1°	KEY SHAFT 1°	CLAVETTE ARBRE 1°
019	019L04191	SEEGER ALBERO 2°	SEEGER RING SHAFT 2°	SEEGER ARBRE 2°
022	022L08222	CHIAVETTA ALBERO 2°	KEY SHAFT 2°	CLAVETTE ARBRE 2°
023	023L412	ALBERO 2°	SHAFT 2°	ARBRE 2°
023K	023LKIT	KIT ALBERO 2°	KIT SHAFT 2°	KIT ARBRE 2°
026	026L70N	GUARNIZIONE RIDUTTORE	GASKET GEAR BOX	JOINT REDUCTEUR
029	029L50292	ANELLO DI TENUTA ALBERO 2° LATO CARTER	SEAL RING SHAFT 2° CASING SIDE	JOINT ARBRE 2°
030	030L06301	SPINA CENTRAGGIO RIDUTTORE	DOWEL PIN GEAR BOX	GOUPILLE REDUCTEUR
031	031L05311	RONDELLA PER TAPPO SCARICO OLIO	WASHER FOR OIL DRAIN PLUG	RONDELLE POUR BOUCHON
032	032L0101	TAPPO SCARICO OLIO	OIL DRAIN PLUG	BOUCHON DE VIDANGE D'HUIL
034	034L55	TAPPO IMMERSIONE OLIO CON GUARNIZIONE	OIL FILLING PLUG WITH GASKET	BOUCHON D'IMMERSION D'HUIL AVEC JOINT
035	035	035L71353	PROTEZIONE BIELLA PLASTICA	CONNECTING ROD PLASTIC PROTECTION
037	037	037L70376	TAPPO PROTEZIONE BIELLA	PLUG PROTECTION CONNECTING ROD
042	042L01423	VITE SERRAGGIO MANOVELLA	BOLT CLAMPING CRANK	VIS SERRAGE MANIVELLE
043	043L321	MANOVELLA	CRANK	MANIVELLE

045	045L54	CUSCINETTO BIELLA	CONNECTING ROD BEARING	ROULEMENT POUR BIELLE
047	047L54	COPERCHIO BIELLA	CONNECTING ROD COVER	COUVERCLE POUR BIELLE
048	048L01484	BULLONE SERRAGGIO BIELLA	BOLT CLAMPING CONNECTING ROD	VIS SERRAGE BIELLE
049	049L05495	RONDELLA	WASHER	RONDELLE
053	770P053N	KIT BIELLA RIGIDA AUTOLUBRIFICATA	KIT RIGID CONNECTION ROD SELF-LUBRICATED	KIT BIELLE RIGIDE AUTOLUBRIFIE’
056	770P056S	MEMBRANA TPV	TPV DIAPHRAGM	MEMBRANE TPV
057	770P057A	PIATTELLO INFERIORE IN POLIPROPILENE	POLYPROPYLENE LOWER PLATE WITH STUDS	PLATEAU INF. EN POLYPROPILENE
	770P057GH	PIATTELLO INFERIORE IN ACCIAIO	STEEL LOWER PLATE WITH STUDS	PLATEAU INF. EN ACIER
	770P057SS	PIATTELLO INFERIORE IN INOX	INOX LOWER PLATE WITH STUDS	PLATEAU INF. EN INOX
059	770P059A	SUPPORTO RIDUTTORE IN ALLUMINIO	ALUMINIUM MOUNTING CASE	SUPPORT REDUCTEUR ALUMINIUM
	770P059G	SUPPORTO RIDUTTORE IN GHISA	CAST IRON MOUNTING CASE	SUPPORT REDUCTEUR FONTE
060	770P060B	BOCCA ASPIRAZIONE/MANDATA FILETTATA PVC 2" BSP	POLYPROPYLENE SUCTION/DELIVERY PORT THREADED 2” BSP	POLYPROPYLENE ORIFICE ASP/REFOULEMENT 2” BSP
	770060GH	BOCCA ASPIRAZIONE/MANDATA FILETTATA 2" BSP IN GHISA	CAST IRON SUCTION/DELIVERY PORT THREADED 2” BSP	ORIFICE ASP/REFOULEMENT 2” BSP EN FONTE
	770060SS	BOCCA ASPIRAZIONE/MANDATA FILETTATA 2" BSP IN INOX	INOX SUCTION/DELIVERY PORT THREADED 2” BSP	ORIFICE ASP/REFOULEMENT 2” BSP EN INOX
063	770P063D15	GUARNIZIONE IN EPDM-FDA	EPDM-FDA SUCTION/DELIVERY GASKET	GARNITURE EPDM-FDA
	770P063O15	GUARNIZIONE IN NBR	NBR SUCTION/DELIVERY GASKET	GARNITURE EN NBR
	770P063V	GUARNIZIONE IN VITON	VITON SUCTION/DELIVERY GASKET	GARNITURE EN VITON
064	770P064A	BATTENTE VALVOLA IN POLIPROPILENE	POLYPROPYLENE VALVE SEAT	BATTANT DE SOUPAPE EN POLYPROPYLENE
	770P064SS	BATTENTE VALVOLA IN ACCIAIO INOX AISI 316	AISI 316 STAINLESS STEEL VALVE SEAT	BATTANT DE SOUPAPE EN ACIER INOX AISI 316
065	770P065D	VALVOLA ASPIRAZIONE/MANDATA IN EPDM-FDA	EPDM-FDA SUCTION/DELIVERY VALVE	CLAPET EPDM-FDA
	770P065O	VALVOLA ASPIRAZIONE/MANDATA IN NBR	NBR SUCTION/DELIVERY VALVE	CLAPET NBR
	770P065V	VALVOLA ASPIRAZIONE/MANDATA IN VITON-FDA	VITON-FDA SUCTION/DELIVERY VALVE	CLAPET VITON-FDA
067	067L90676	CUSCINETTO A SFERE PER ALBERO 2°	BEARING SHAFT 2°	ROULEMENT ARBRE 2°
068	770P068GH	CORPO POMPA IN GHISA	CAST IRON PUMP CASING	CORPE POMPE EN FONTE
	770P068P	CORPO POMPA IN POLIPROPILENE	POLYPROPYLENE PUMP CASING	CORPE POMPE EN POLYPROPYLENE
	770P068SS	CORPO POMPA IN INOX	INOX PUMP CASING	CORPE POMPE EN INOX

077	077L01779	VITE PER PROTEZIONE	STUD PROTECTION	VIS POUR PROTECTION
088D	770P088FD	PIEDE DESTRO A U IN FERRO	IRON RIGHT U FOOT	PIED DROIT EN FER
	770P088D	PIEDE DESTRO A U AISI 304	AISI 304 RIGHT U FOOT	PIED DROIT AISI 304
088S	770P088FS	PIEDE SINISTRO A U IN FERRO	IRON LEFT U FOOT	PIED GAUCHE EN FER
	770P088S	PIEDE SINISTRO A U AISI 304	AISI 304 LEFT U FOOT	PIED GAUCHE AISI 304
089	770P089F	PIEDE PER POMPA IN GHISA	FOOT FOR CAST IRON PUMP	PIEDS POUR POMPE EN FONTE
	770P089P	PIEDE PER POMPA IN POLIPROPILENE	FOOT FOR POLYPROPYLENE PUMP	PIEDS POUR POMPE EN POLYPROPYLENE
140	140L3020	CARRELLO COMPLETO PER MOTORE ELETTRICO O A SCOPPIO	TRAILER ASSY FOR PETROL ENGINE OR ELECTRIC MOTOR	CHARIOT POUR MOTEUR A ESSENCE OU ELECTRIQUE
160	160L271605	RUOTA PNEUMATICA PER CARRELLO	PNEUMATIC WHEELS FOR TRAILER	ROUE PNEUMATIQUE
162	162L3017	TELAIO CARRELLO PER MOTORE ELETTRICO O A SCOPPIO	TRAILER FRAME FOR PETROL ENGINE OR ELECTRIC MOTOR	CHASSIS DU CHARIOT POUR MOTEUR A ESSENCE OU ELECTRIQUE
192	192L4011	PIGNONE ELICOIDALE PER MOTORE ELETTRICO RATIO 1:43 (ALBERO DIAM 24 MM)	HELICAL PINION FOR ELECTRIC MOTOR RATIO 1:43 (SHAFT DIAM 24 MM)	PIGNON HELICOIDALE POUR MOTEUR ELECTRIQUE RR 1:43 (ARBRE DIAM 24 MM)
	192L4014	PIGNONE ELICOIDALE PER MOTORE A SCOPPIO O DIESEL RATIO 1:43 (PER ALBERO DIAM 19,05 MM)	HELICAL PINION FOR GASOLINE OR DIESEL ENGINE RATIO 1:43 (FOR SHAFT DIAM 19,05 MM)	PIGNON HELICOIDALE POUR MOTEUR ESSENCE OU DIESEL RR 1:43 (POUR ARBRE DIAM 19,05 MM)
193	193L9019311	CUSCINETTO SUPPORTO PIGNONE ELICOIDALE	BEARING FOR HELICAL PINION	ROULEMENT POUR PIGNON
195	195L100	COPERCHIO RIDUTTORE ALLUMINIO ELICOIDALE	COVER GEAR BOX ALUMINIUM HELICAL	COUVERCLE REDUCTEUR EN ALUMINIUM HELICOIDALE
196	196L9019612	GABBIA A RULLI	NEEDLE BUSHING	ROULEMENT
197	197L7091	RONDELLA ALBERO 2° LATO COPERCHIO	WASHER SHAFT 2° COVER SIDE	RONDELLE
198	198L7011	RONDELLA ALBERO 1° LATO COPERCHIO	WASHER SHAFT 1° COVER SIDE	RONDELLE
199	199L4013	INGRANAGGIO ELICOIDALE ALBERO 2°	HELICAL DRIVEN SHAFT 2°	ENGRENAGE ARBRE 2°
200	200L4014	INGRANAGGIO ELICOIDALE ALBERO 1° R.R. 1:43	HELICAL DRIVEN SHAFT 1° R.R. 1:43	ENGRANAGE ARBRE 1° R.R. 1:43
201	201L415	ALBERO 1°	SHAFT 1°	ARBRE 1°
201K	201LKIT	KIT ALBERO 1°	KIT SHAFT 1°	KIT ARBRE 1°
202	202L7012	RONDELLA ALBERO 1° LATO CARTER	WASHER SHAFT 1° CASING SIDE	RONDELLE ARBRE 1°
204	204L100	CARTER RIDUTTORE IN ALLUMINIO	CARTER GEAR BOX ALUMINIUM	CARTER REDUCTEUR EN ALUMINIUM
205	205L7020512	TAPPO ALBERO 1° LATO CARTER	PLUG SHAFT 1° CASING SIDE	BOUCHON ARBRE 1°
206	206L3020626	GANCIO DI SOLLEVAMENTO	LIFTING HOOK	CROCHET

207	207L115N	RIDUTTORE COMPLETO ALLUMINIO DENTI ELICOIDALI RATIO 1:43 (SENZA PIGNONE)	ALUMINIUM GEAR BOX HELICALS TEETH ASSY RATIO 1:43 (WITHOUT PINION)	REDUCTEUR A DENTS HELICOIDALES RR 1:43 ALUMINIUM (SANS PIGNON)
209	209L520917	RONDELLA	WASHER	RONDELLE
213	213L54	TESTA BIELLA AUTOLUBRIFICATA	BIG END CONNECTING ROD	TÊTE BIELLE AUTOLUBRIFIÉ
315	315L54	DISTANZIALE	SPACER	ENTRETOISE
316	316L54	DISTANZIALE	SPACER	ENTRETOISE
316P	316L84	DISTANZIALE PIGNONE	PINION SPACER	PIGNON POUR ENTRETOISE
612	770P612P	ANTIVIBRANTE	SHOCK ABSORBER	AMORTISSEUR
620	620M10	PIEDE BIELLA PER 213L54	CONNECTION ROD FOOT FOR 213L54	PIED BIELLE POUR 213L54
621	621M10	BULLONE STELO BIELLA	CONNECTING ROD BOLT	BOULON DE BIELLE
622	622M20	DISTANZIALE BIELLA	CONNECTING ROD SPACER	ENTRETOISE DE BIELLE
B2	B2N05	RACCORDO MASCHIO FILETTATO M.2”X60MM	THREADED MALE 2”X60MM	RACCORD MALE FILETE’ 2”X60MM
B4	B2R01	RACCORDO FEMMINA PORTAGOMMA Ø60MM	FEMALE WITH SPIGOT Ø60MM	RACCORD FEMELLE Ø60MM
B5	B2E01	FILTRO PESCANTE ZINCATO Ø60MM	GALVANIZED STRAINER Ø60MM	CREPINE Ø60MM
B7	B2R08	RACCORDO MASCHIO PORTAGOMMA Ø60MM	MALE WITH SPIGOT Ø60MM	RACCORD MALE Ø60MM
P48	770P048	DADO FISSAGGIO	NUT	ECROU

NOTES

Caffini Cipriano s.r.l.
Via G. di Vittorio, 46 – 43044
Lemignano di Collecchio (Parma) – Italy
phone +39 0521 804325 **web** www.caffinipumps.it
e-mail info@caffinipumps.it

Caffini PUMPS
place & forget