TRASHLIB

SELF PRIMING CENTRIFUGAL TRASH PUMP

IT – CATALOGO RICAMBI

EN – SPARE PARTS LIST

FR – LISTE DES PIECES DE RECHANGE

Caffini PUMPS

place & forget

PUMP ASSEMBLY

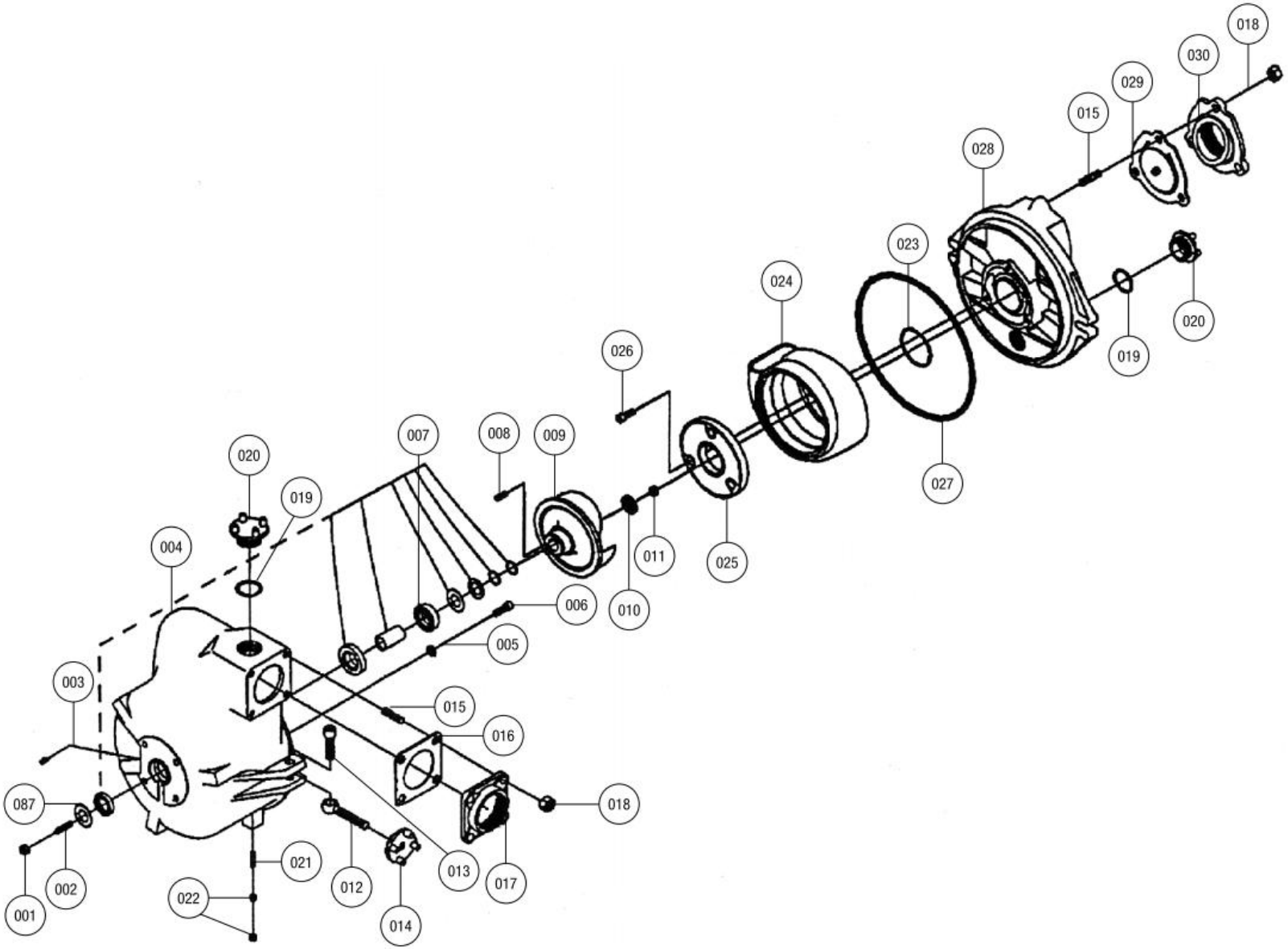

WRAPAROUND ARRANGEMENT

FRAME

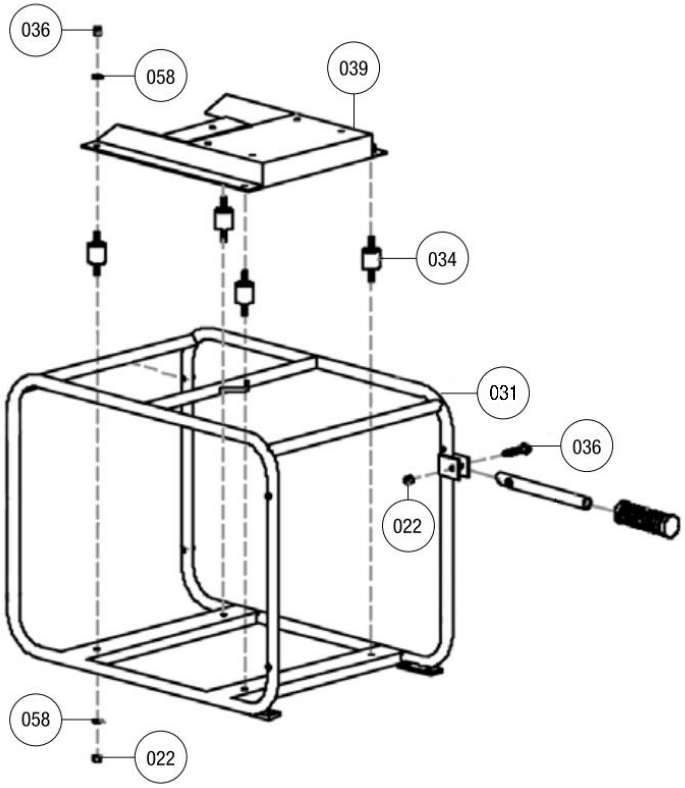

TRAILER

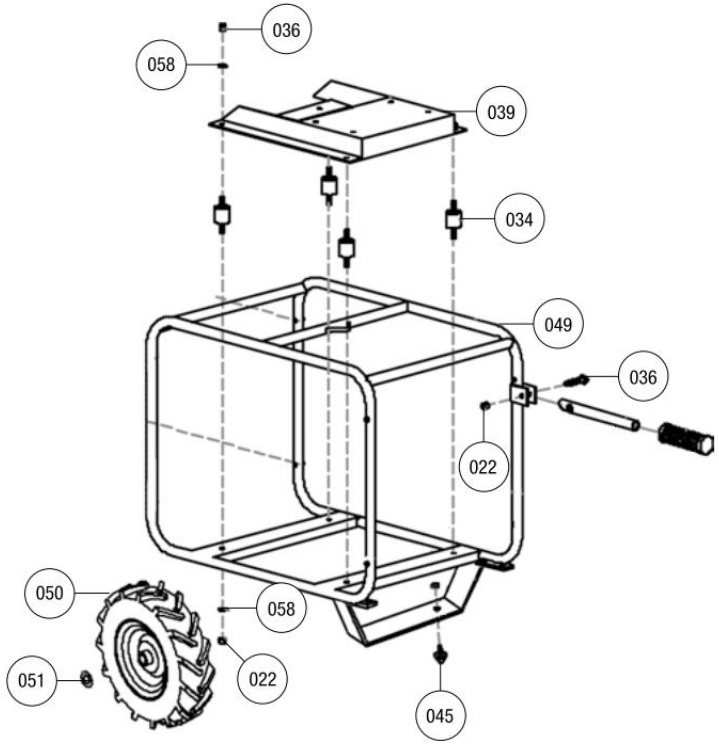

MECHANICAL SEAL ASSEMBLY

TRASHLIB 2”

TL007/25N

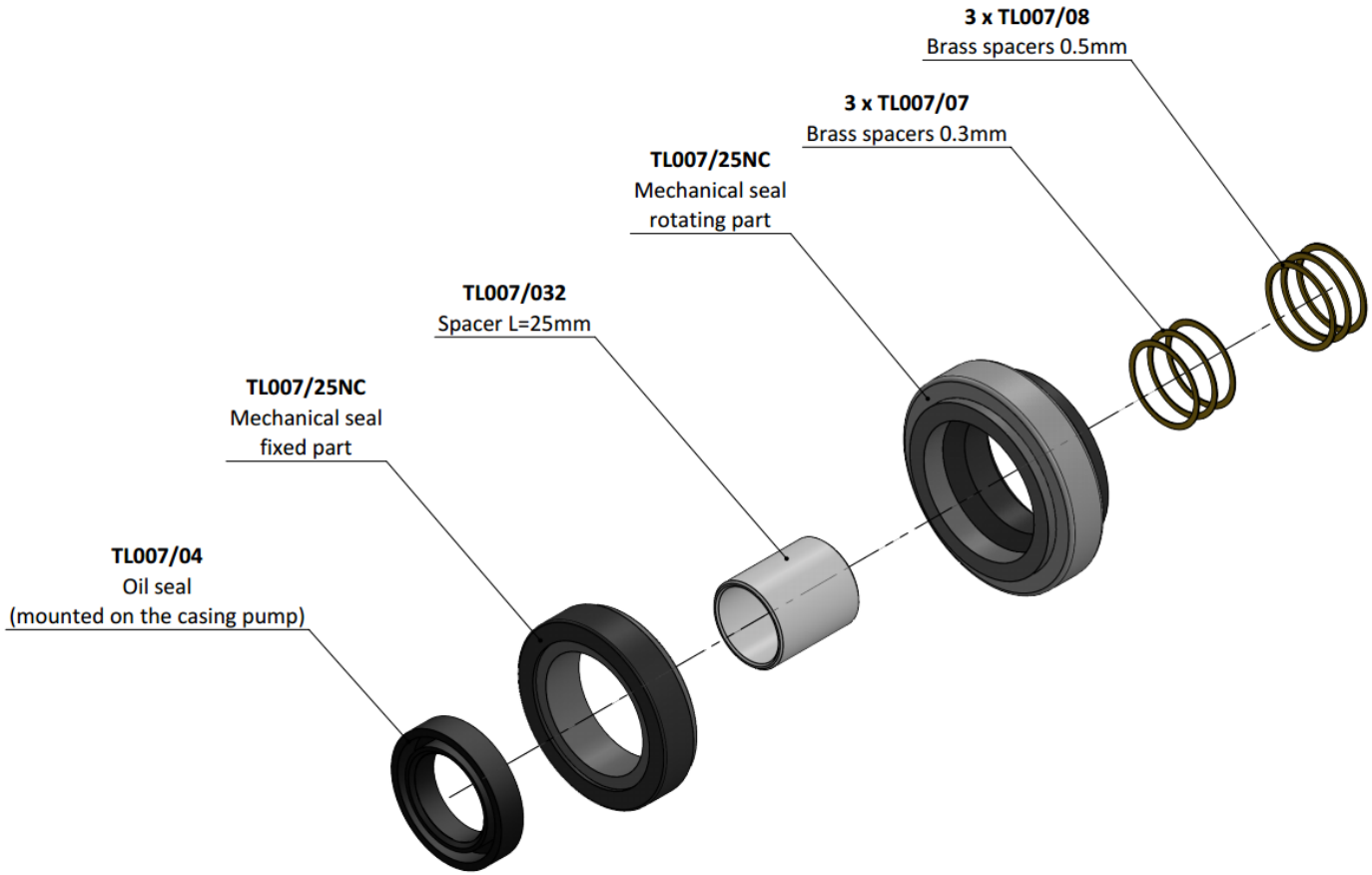

TRASHLIB 3”

TL007/35N

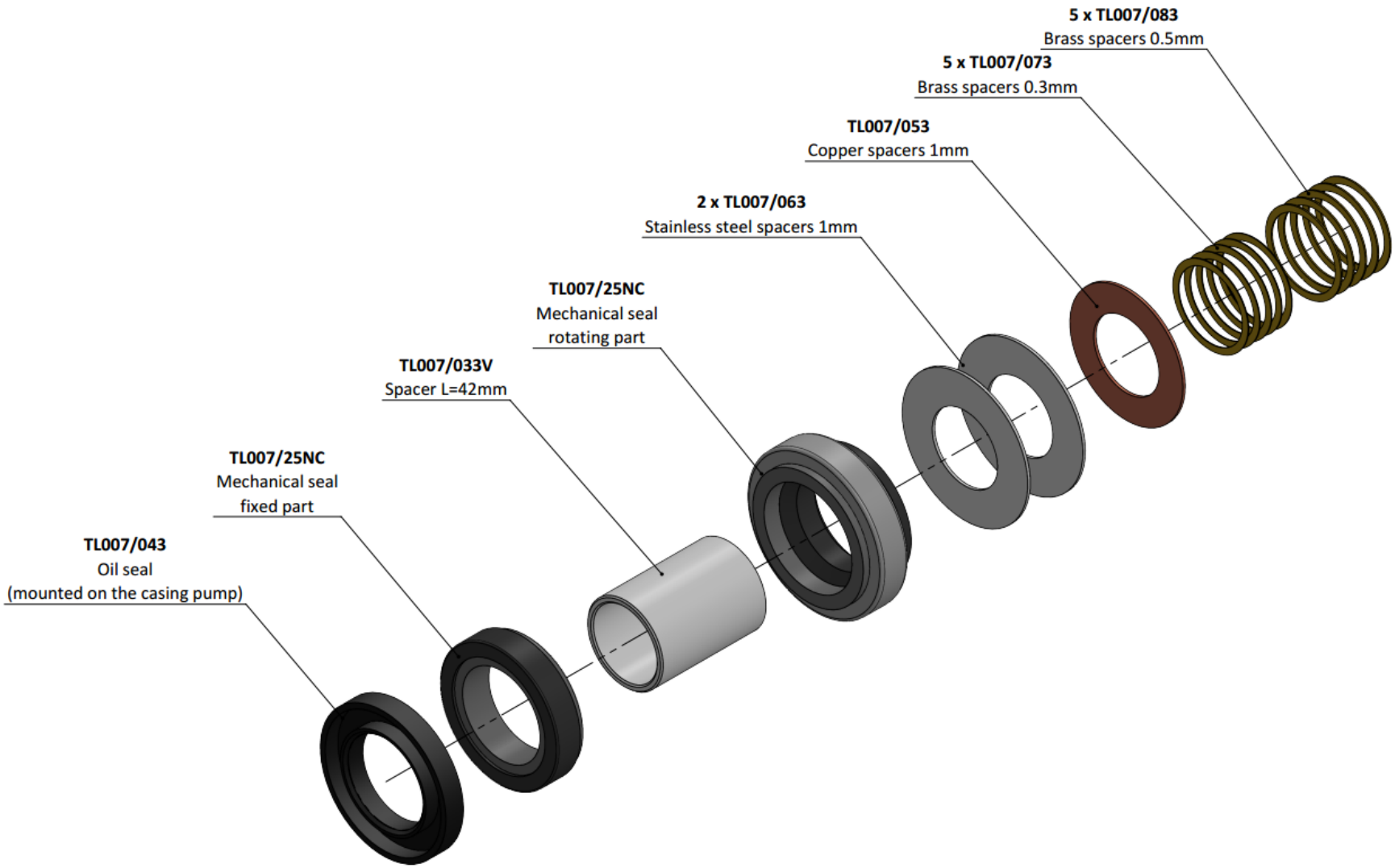

TRASHLIB 4”L

TL007/4LG

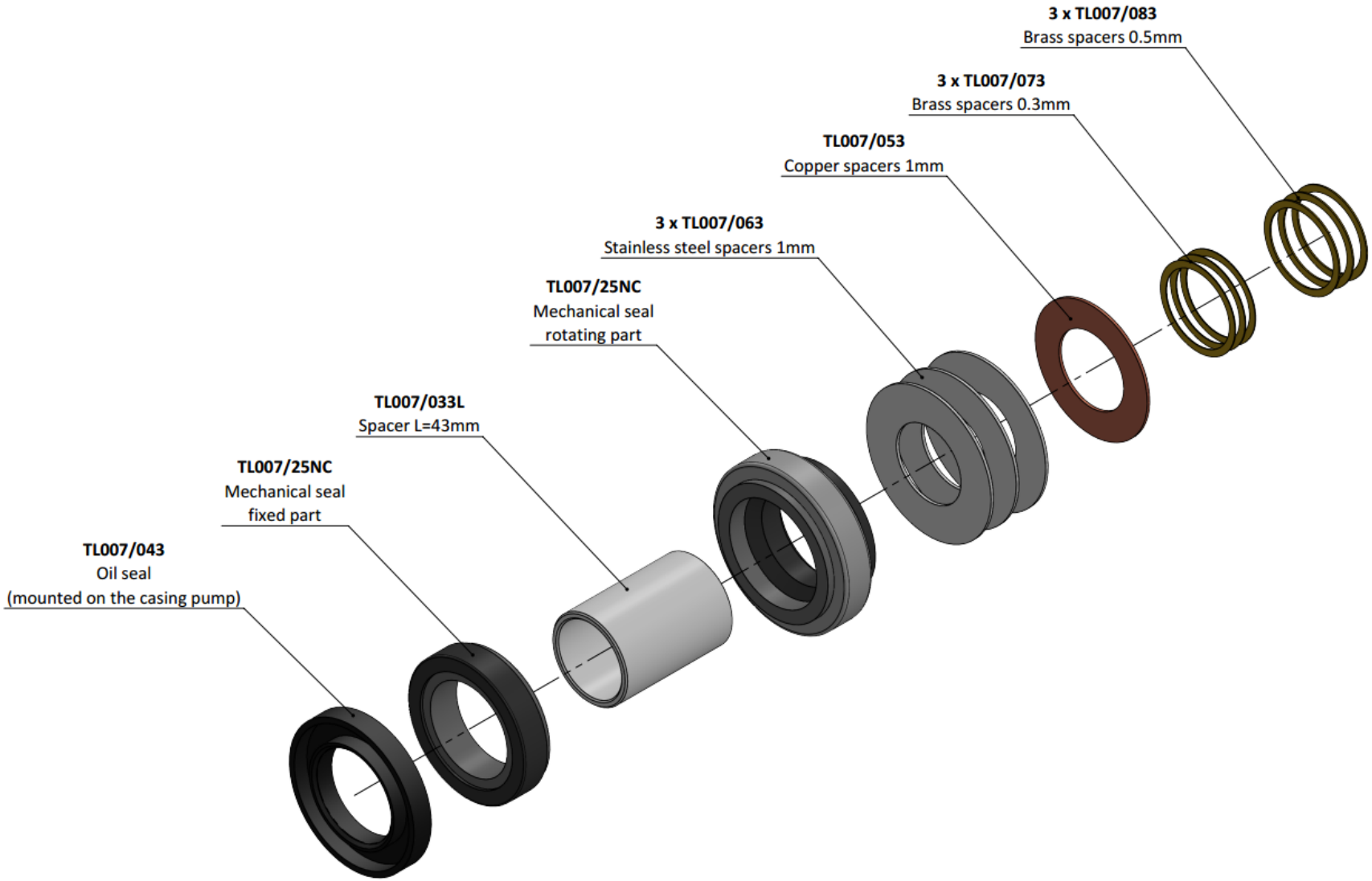

ACCESSORIES

ANODIC PROTECTION FOR MARINE VERSION

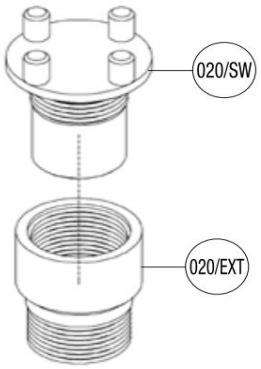

COUPLINGS KIT WITH STRAINER

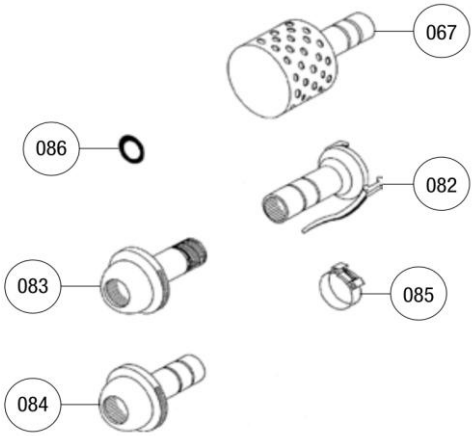

COVER PUMP HANDLES

for TL4"L

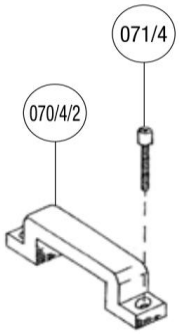

GASKET SET

PUMP GASKET SET
INCLUDING:
n.1 TL016
n.2 TL019
n.1 TL023
n.1 TL027
n.1 TL029

SPARE PARTS LIST

FIG	PART NUMBER			DENOMINAZIONE	DESCRIPTION	DESCRIPTION
	TRASHLIB 2"	TRASHLIB 3"	TRASHLIB 4"L			
001	TL001/01			DADO AISI 5/16"	S.S.NUT 5/1 6"	ECROU EN ACIER INOXIDABLE 5/16".
001		TL001/31		DADO AISI 7/16" PER MOTORI HONDA GX270 e BRIGGS & STRATTON	S.S.NUT 7/16" FOR HONDA GX270 AND BRIGGS & STRATTON	ECROU EN AISI 7/16" POUR MOTEURS HONDA GX 270 ET BRIGGS & STRATTON
001		TL001/32	TL001/32	DADO AISI 3 /8" PER ROBIN, LOMBARDINI, KAWASAKI, HATZ	S.S.NUT 3/8" FOR ROBIN, LOMBARDINI, KAWASAKI, HATZ	ECROU AISI 3/8" POUR LOMBARDINI, KAWASAKI, HATZ
002	TL002/21			PRIGIONIERO GIRANTE 5/16"	IMPELLER STUD 5/16"	GOUJON TURBINE 5/16"
002		TL002/31/630		PRIGIONIERO GIRANTE 7/16" PER HONDA GX 270 E BRIGGS & STRATTON	IMPELLER STUD 7/16" FOR HONDAGX270 AND BRIGGS & STRATTON	GOUJON TURBINE 7/16"" POUR HONDA GX270 ET BRIGGS & STRATTON
002		TL002/32/630		PRIG. GIRANTE 3/8" PER ROBIN, KAWASAKI, HATZ	IMPELLER STUD 3/8" FOR ROBIN, KAWASAKI, HATZ	GOUJON TURBINE 3/8" POUR ROBIN, KAWASAKI, HONDA, HATZ
003	TL003/0	TL003/0	TL003/0	INGRASSATORE M6	GREASER	GRAISSEUR.
004	TL004/25N	TL004/35N	TL004/4L	CORPO POMPA	PUMP CASING	CORPS DE LA POMPE.
004	TL004/SW/25N	TL004/SW/35N	TL004/SW/4L	CORPO POMPA VERSIONE MARINA	PUMP CASING MARINE VERSION	CORPS DE LA POMPE VERSION MARINE
005	TL005/2	TL005/3	TL005/3	RONDELLA DI SICUREZZA	SAFETY WASHER	RONDELLE DE SECURITÉ.
006	TL006/0	TL006/3	TL006/3	VITE AISI FISSAGGIO CORPO (SPECIFICARE IL MOTORE)	S.S. SCREW FIXING PUMP CASING (SPECIFY ENGINE TYPE)	VIS AISI POUR LA FIXATION DU CORPS (INDIQUER LE MODEL)
007	TL007/25N	TL007/35N	TL007/4LG	TENUTA MECCANICA (SPECIFICARE IL MOTORE)	MECHANICAL SEAL (SPECIFY ENGINE TYPE)	JOINT D'ETANCHEITE (INDIQUER LE MODEL)
008	TL008/25N	TL008/3	TL008/3	CHIAVETTA GIRANTE	IMPELLER KEY	CLAVETTE DE LA TURBINE.
008	TL008/0/SS	TL008/3/SS	TL008/3/SS	CHIAVETTA GIRANTE AISI VERSIONE MARINA	S.S. IMPELLER KEY MARINE VERSION	CLAVETTE DE LA TURBINE AISI VERSION MARINE
009	TL009/25N	TL009/35N	TL009/42LG	GIRANTE	IMPELLER	TURBINE
009	TL009/25N/SW	TL009/35/SW	TL009/42LGW	GIRANTE VERSIONE MARINA	IMPELLER MARINE VERSION	TURBINE VERSION MARINE
010	TL010/2	TL010/3	TL010/3	RONDELLA AISI FISSAGGIO GIRANTE	S.S. WASHER FIXING IMPELLER	RONDELLE AISI FIXATION TURBINE
011	TL011/0	TL011/3	TL011/3	DADO AISI BLOCCAGGIO GIRANTE	IMPELLER S.S. LOCK-NUT	ECROU AISI FIXATION TURBINE
012	TL012/0	TL012/3	TL012/3	TIRANTE AISI	S.S. TYE ROD	TIRANT AISI

013	TL013/0	TL013/0	TL013/0	VITE AISI	S.S SCREW	VIS AISI
014	TL014/0	TL014/0	TL014/0	MANIGLIETTA BRONZO	BRONZE KNOB	ECROU A OREILLE EN BRONZE
015	TL015/0	TL015/0	TL015/4	PRIGIONIERO	STUD	GOUJON
015	TL015/0/SS	TL015/0/SS	TL015/4/SS	PRIGIONIERO AISI VERSIONE MARINA	S.S. STUD MARINE VERSION	GOUJON AISI VERSION MARINE
016	TL016/2	TL016/3	TL016/4	GUARNIZIONE BOCCA MANDATA	GASKET DELIVERY PORT	GARNITURE ORIFICE DE REFOULEMENT
017	TL017/2	TL017/3	TL017/4	FLANGIA MANDATA BSP	DELIVERY PORT BSP	BRIDE DE REFOULEMENT BSP
017	TL017/SW/2	TL017/SW/3	TL017/SW/4	FLANGIA MANDATA BSP OTS MARINA	OTS DELIVERY PORT BSP MARINE	BRIDE DE REFOULEMENT OTS BSP MARINE
018	TL018/0	TL018/0	TL018/4	DADO	NUT	ECROU
018	TL018/0/SS	TL018/0/SS	TL018/4/SS	DADO AISI VERSIONE MARINA	S.S. NUT MARINE VERSION	ECROU AISI VERSION MARINE
019	TL019/0	TL019/0	TL019/0	O RING PER TAPPO	PLUG O RING	O' RING DU BOUCHON
020	TL020/0	TL020/0	TL020/0	TAPPO	PLUG	BOUCHON
020	TL020/SW	TL020/SW	TL020/SW	TAPPO PER VERSIONE MARINA	PLUG MARINE VERSION	BOUCHON VERSION MARINE
020	TL020/EXT	TL020/EXT	TL020/EXT	PROLUNGA PER TAPPO 1" VERSIONE MARINA	EXTENTION 1" SS MARINE VERSION	EXTENTION 1" INOX VERSION MARINE
021	TL021/0	TL021/4	TL021/4	PRIGIONIERO FISSAGGIO CORPO A BASE (SPECIFICARE IL MOTORE)	STUD (SCECIFY ENGINE TYPE)	GOUJON POUR LA FIXATION DU CORPS AU CHASSIS (INDIQUER LE MODEL)
022	TL022/0	TL022/4	TL022/4	DADO	NUT	ECROU
023	TL023/2	TL023/3	TL023/4	O RING VOLUTA	VOLUTE O RING	O' RING DE LA VOLUTE
024	TL024/2	TL024/3	TL024/4LG	VOLUTA	VOLUTE	VOLUTE
025	TL025/2	TL025/3	TL025/4LG	PIATTO USURA GOMMATO CON VITI	WEAR PLATE WITH S.S. SCREW	PLAQUE D'USURE CAOUTCHOUTEE AVEC VIS
026	TL026/0	*TL026/0*	*TL026/0*	VITE AISI PIATTO USURA	S.S. SCREW FOR WEAR PLATE	VIS AISI PLAQUE D'USURE.
027	TL027/0	TL027/3	TL027/3	O RING COPERCHIO POMPA	PUMP COVER O RING	O' RING COUVERCLE DE LA POMPE
028	TL028/2	TL028/3	TL028/4L	COPERCHIO POMPA	PUMP COVER	COUVERCLE DE LA POMPE
028	TL028/SW/2	TL028/SW/3	TL028/SW/4L	COPERCHIO POMPA VERSIONE MARINA	PUMP COVER MARINE VERSION	COUVERCLE DE LA POMPE VERSION MARINE
029	TL029/2	TL029/3	TL029/4	VALVOLA COMPLETA	FLAPPER GASKET ASSY	CLAPET
030	TL030/2	TL030/3	TL030/4	PORTAVALVOLA BSP	SUCTION PORT BSP	ORIFICE D'ASPIRATION BSP
030	TL030/SW/2	TL030/SW/3	TL030/SW/4	PORTAVALVOLA BSP OTS MARINA	OTS SUCTION PORT BSP MARINE	ORIFICE D'ASPIRATION BSP OTS MARINE

031	TL031/22	TL031/23	TL031/23	BARELLA PROTETTIVA	WRAPAROUND FRAME	CADRE DE PROTECTION
034	TL034/0	TL034/3	TL034/3	SILENTBLOCK	SHOCKABSORBER	SILENTBLOCK
036	TL036/0	TL306/3	TL036/4	VITE	SCREW	VIS
039	TL039/2	TL039/3	TL039/3	PIASTRA FISSAGGIO MOTORE	PLATE	PLAQUE D'APPOI DU MOTEUR.
045	TL045/S	TL045/S	TL045/S	ANTIVIBRANTE PARABOLICO	SHOCKABSORBER	SILENTBLOCK
049	TL049/2WP	TL049/3PWH270	TL049/3PWH270	CARRELLO PROTETTIVO	WRAPAROUND TRAILER	CHARIOT CADRE TUBOLAIRE
050	TL050/2P	TL050/3P	TL050/3P	RUOTA PNEUMATICA CARRELLO DIESEL	WHEEL FOR DIESEL TRAILER	ROUE CHARIOT POUR DIESEL
051	TL051/0	TL051/0	TL051/0	RONDELLA FISSAGGIO RUOTA	WASHER	RONDELLE
058	TL058/3	TL058/3	TL058/3	DADO	LOCK-NUT	ECROU
067	TL067/2	TL067/33	TL067/43	FILTRO PESCANTE	STRAINER	CREPINE
070			TL070/4/2	MANIGLIA mm 190	HANDLE mm 190	POIGNÉE mm 190
071			TL071/4	VITE	SCREW	VIS
082	B2R15	B2R02	B2R03	PORTAGOMMA FEMMINA	FEMALE WITH SPIGOT	RACCORD FEMELLE
083	B2N00.3	B2N07	B2N08	RACCORDO MASCHIO FILETTATO	MALE WITH THREAD	RACCORD MALE FILETÉ
084	B2R08	B2R09	B2R10	PORTAGOMMA MASCHIO	MALE WITH SPIGOT	RACCORD MALE
085	B2GARD.01	B2GARD.09	B2GARD.11	FASCETTA TUBO ASPIRAZIONE	CLAMP FOR SUCTION HOSE	COLLIER DE SERRAGE TUYAU ARMÉ
085	B2GARD.02	B2GARD.10	B2GARD.13	FASCETTA MANICHETTA	CLAMP FOR FLAT HOSE	COLLIER DE SERRAGE LANCE
086	B2M02	B2M03	B2M04	GUARNIZIONE GIUNTO	GASKET	JOINT
099	TL099/2	TL099/3	TL099/4L	SERIE GUARNIZIONI POMPA	PUMP GASKET SET	JEUX DE JOINTS POMPE

NOTES

Caffini Cipriano s.r.l.
Via G. di Vittorio, 46 – 43044
Lemignano di Collecchio (Parma) – Italy
phone +39 0521 804325 **web** www.caffinipumps.it
e-mail info@caffinipumps.it

Caffini PUMPS
place & forget