LIBELLULA 1-3”

CONTRACTOR VERSION

SELF PRIMING DIAPHRAGM PUMP

IT – CATALOGO RICAMBI

EN – SPARE PARTS LIST

FR – LISTE DES PIECES DE RECHANGE

Caffini PUMPS

place & forget

GEAR BOX ASSEMBLY

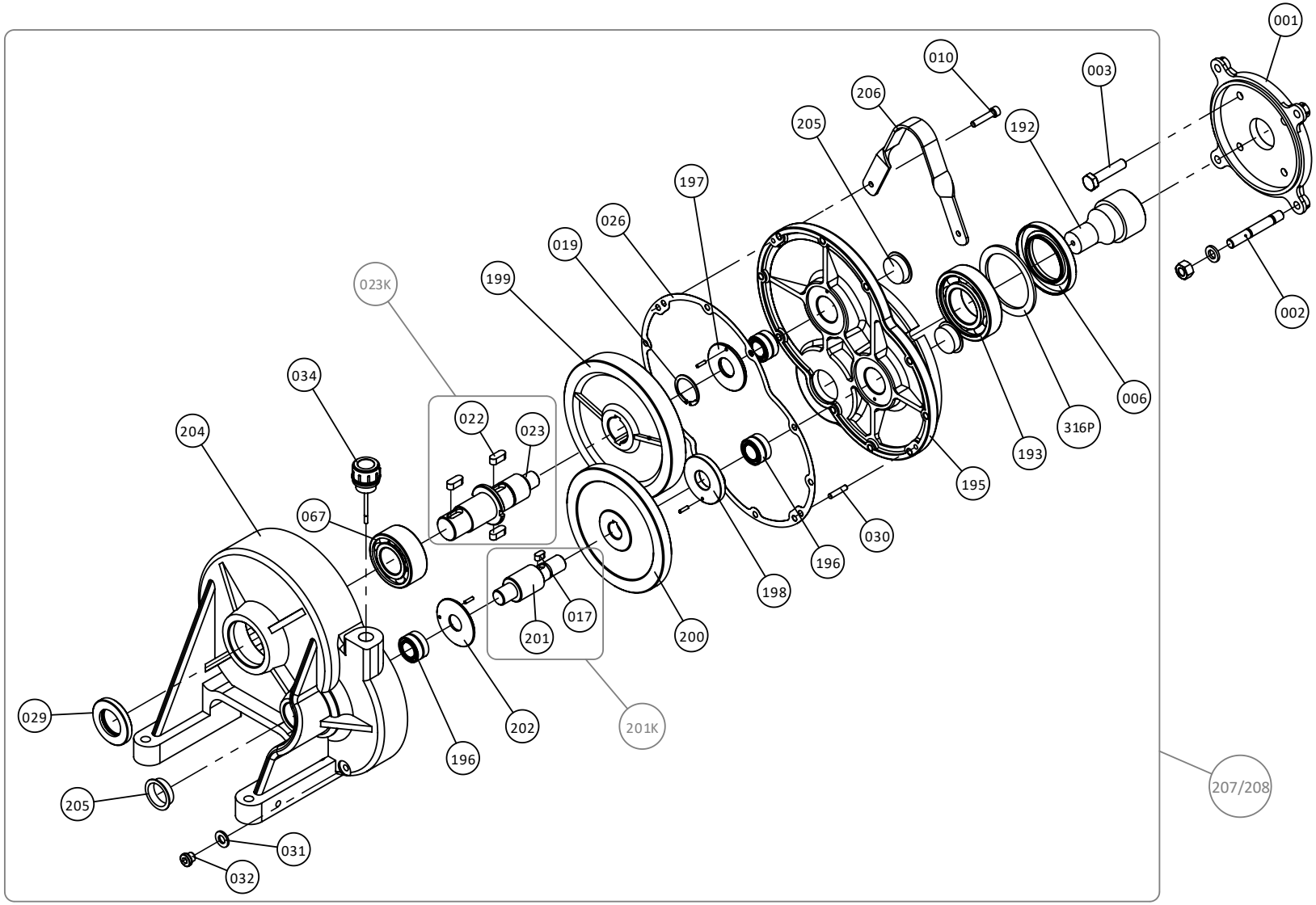

NON-WETTED PARTS ASSEMBLY

SELF LUBRICATED SPRING CONNECTION ROD

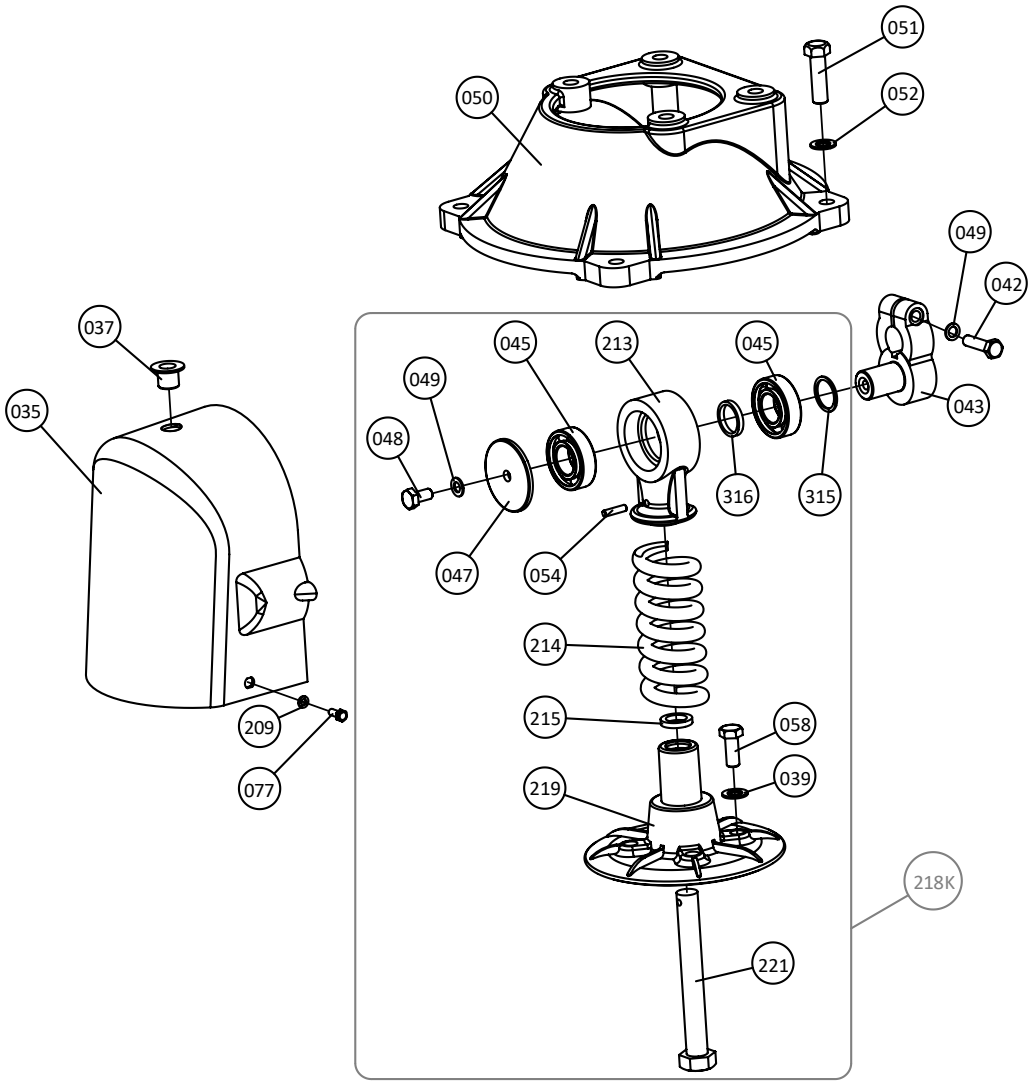

NON-WETTED PARTS ASSEMBLY

SELF LUBRICATED RIGID CONNECTION ROD

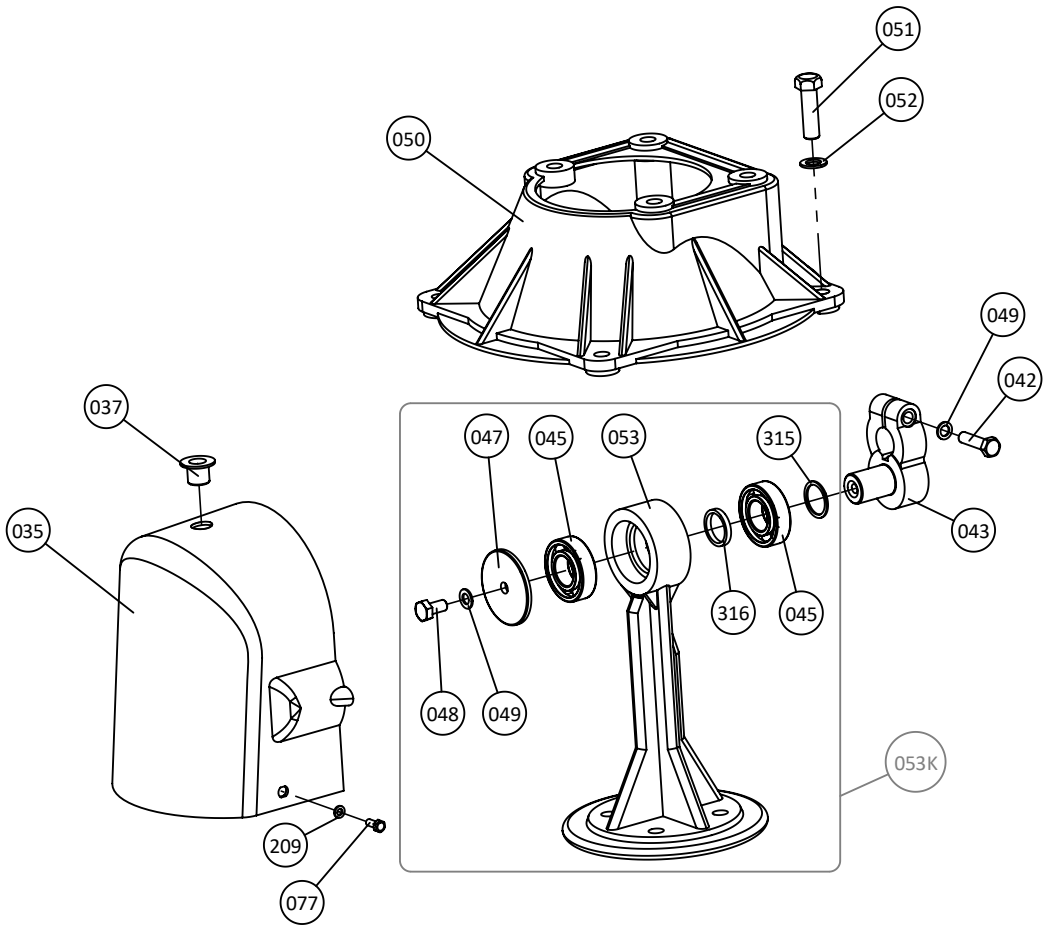

WETTED PARTS ASSEMBLY

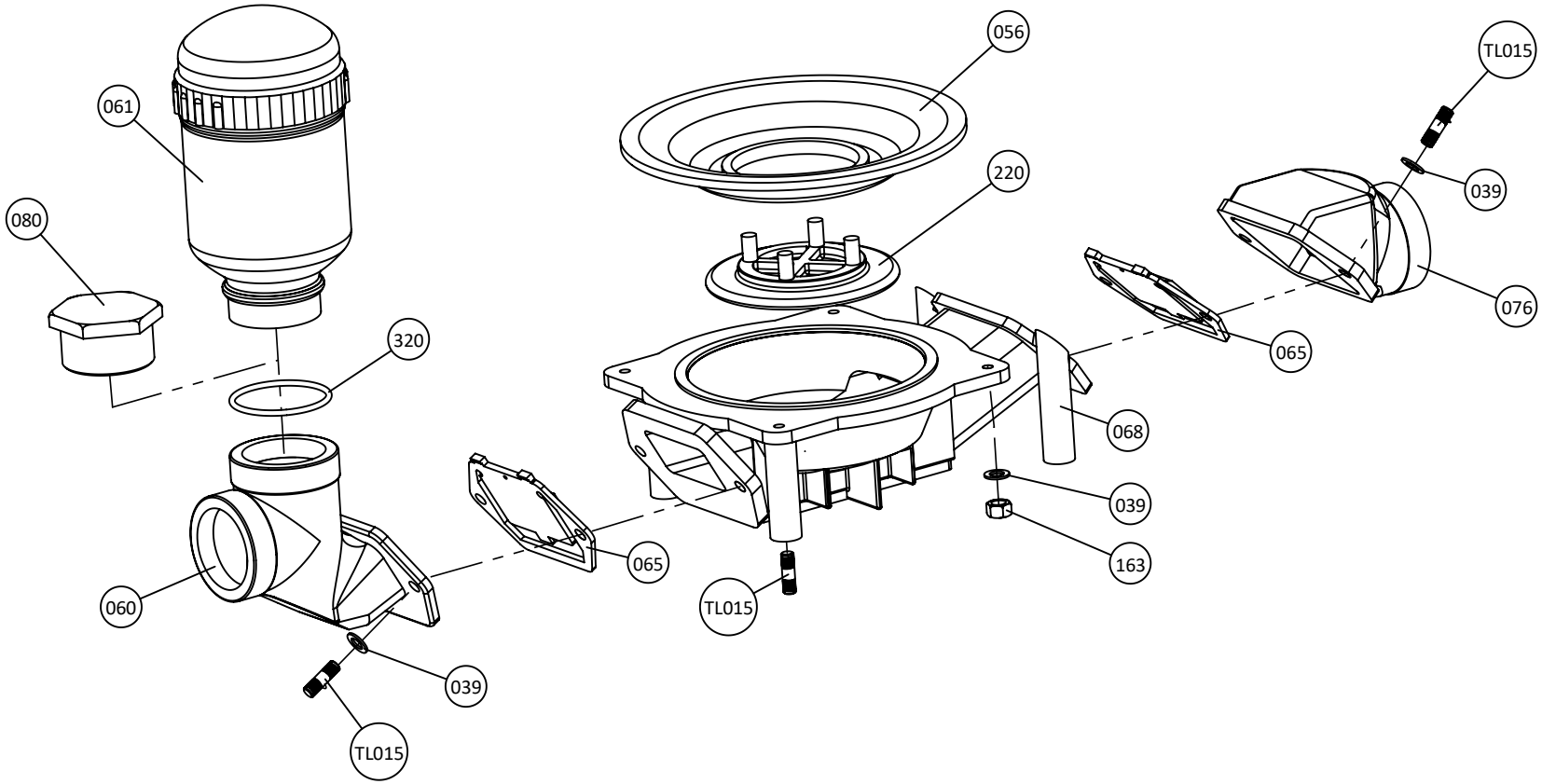

STATIONARY FRAME

088L307 / 088L54

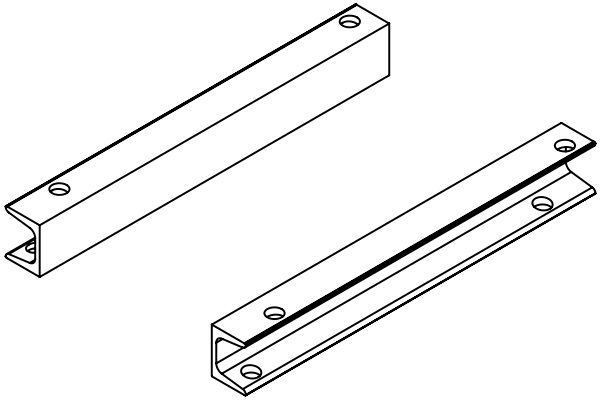

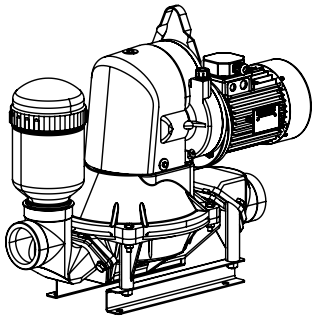

SMALL TRAILER FOR ELECTRIC MOTOR AND PETROL ENGINE

140L3017C

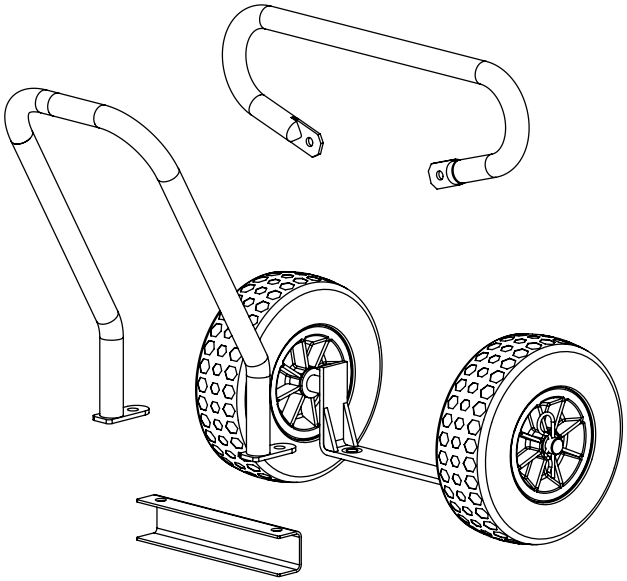

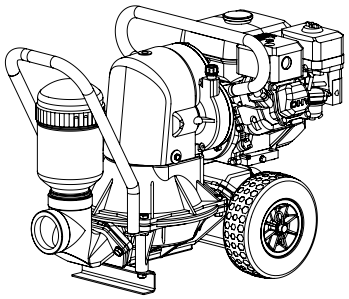

WRAPAROUND TRAILER FOR ELECTRIC MOTOR AND PETROL ENGINE

140L3018WE

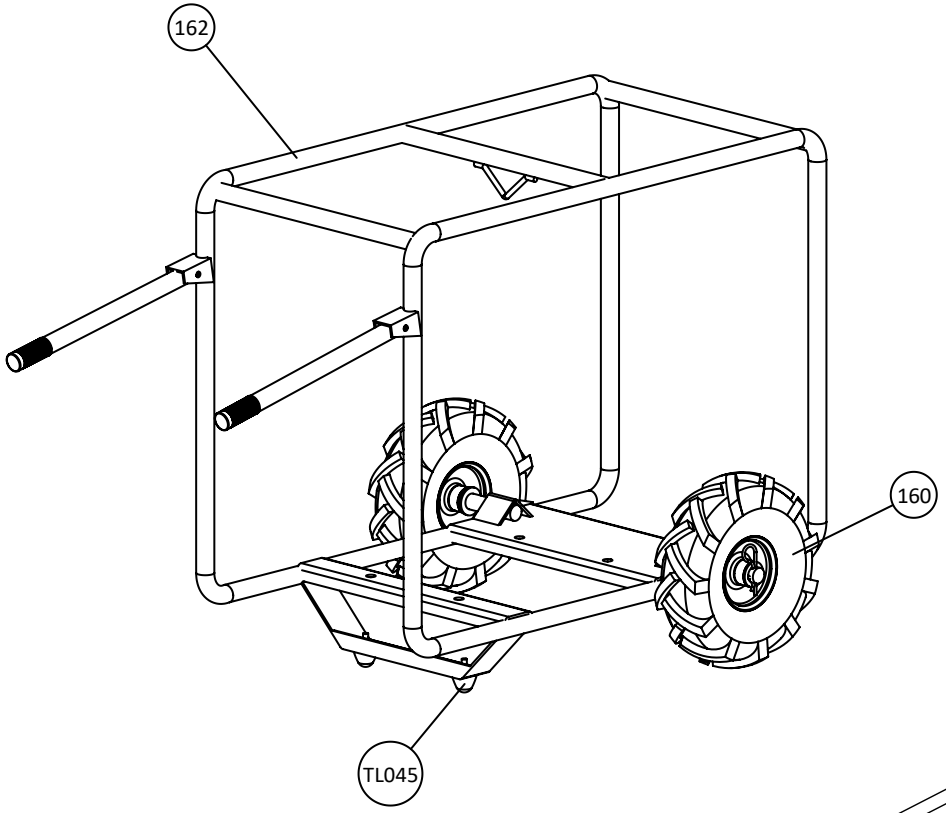

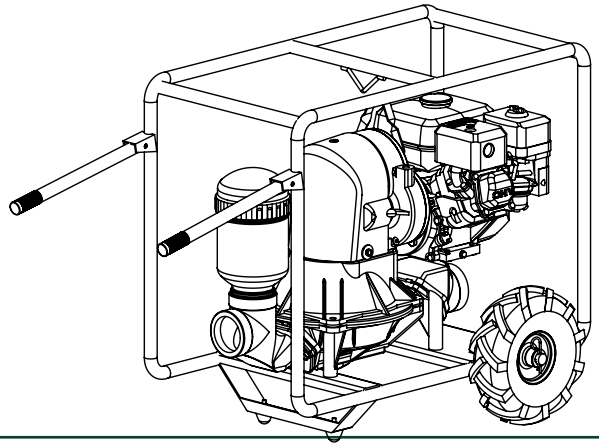

WRAPAROUND TRAILER FOR DIESEL ENGINE

140L3018WE+165L1B20KD350

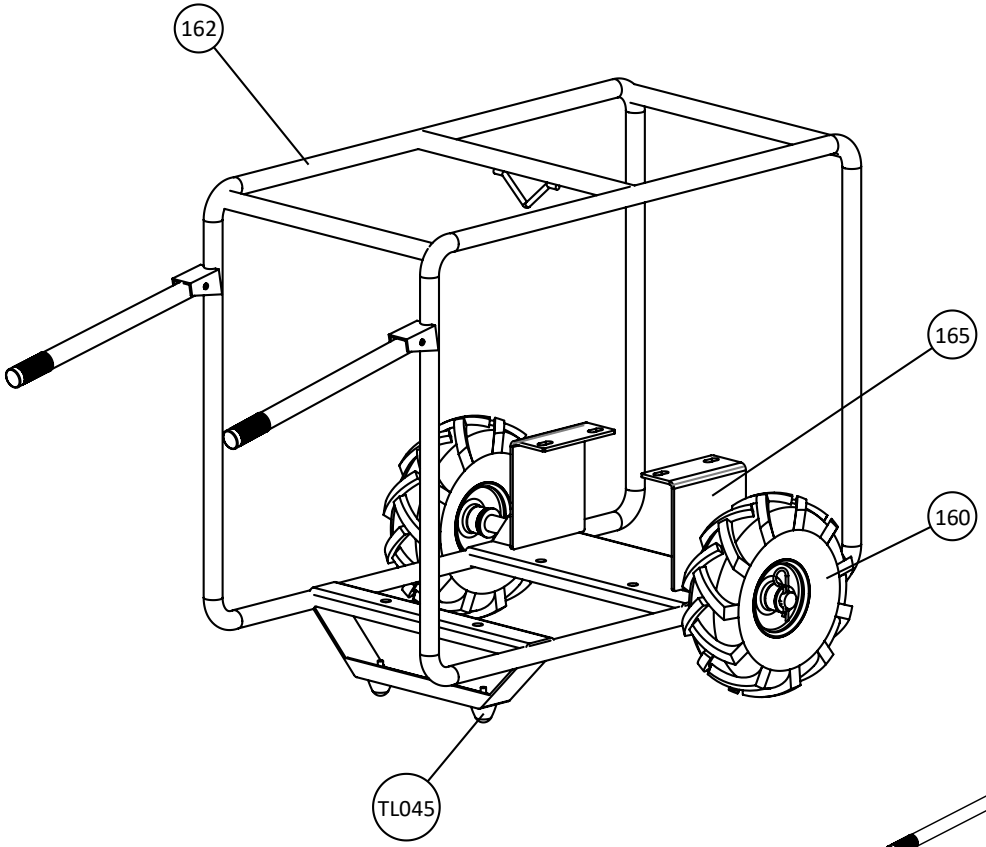

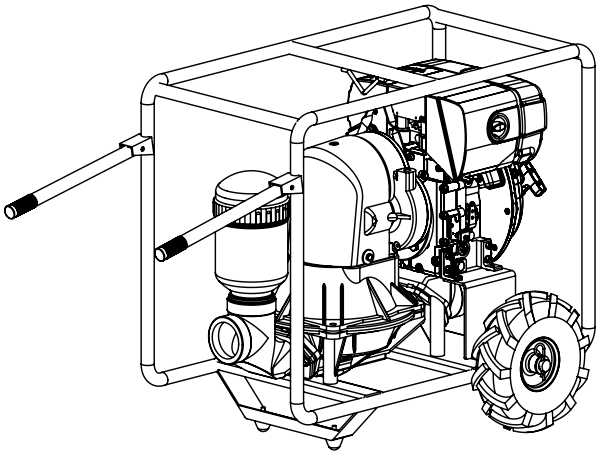

ACCESSORIES

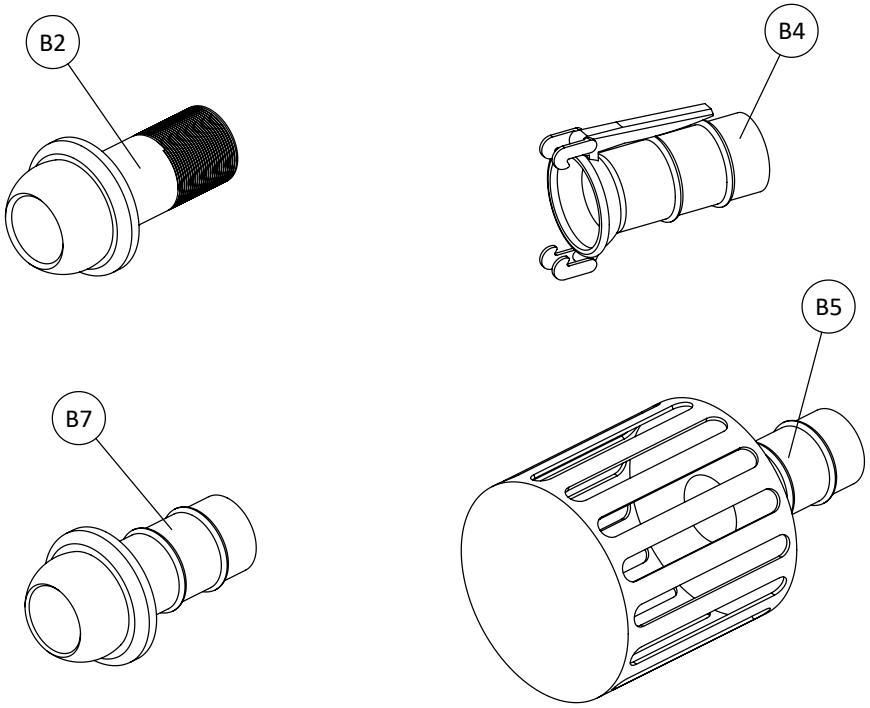

SPARE PARTS LIST

FIG	PART NUMBER	DENOMINAZIONE	DESCRIPTION	DESCRIPTION
001	001L1002	FLANGIA ACCOPPIAMENTO MOTORE	ADAPTER COUPLING ENGINE	BRIDE DE COUPLEMENT MOTEUR
002	002L0321U	PRIGIONIERI PER ACCOPPIAMENTO FLANGIA	SCREWS FOR FLANGE COUPLING	GOUJONS POUR COUPLEMENT BRIDE
003	003L0234	VITE PER ACCOPPIAMENTO FLANGIA	STUD FOR FLANGE COUPLING	VIS POUR COUPLEMENT BRIDE
006	006L5061	ANELLO TENUTA	OIL SEAL RING	JOINT
010	010L02102	VITE FISSAGGIO COPERCHIO AL CARTER	CAPSCREW FASTENING COVER TO CASING	VIS DE FIXAGE COUVERCLE
017	017L08171	CHIAVETTA ALBERO 1°	KEY SHAFT 1°	CLAVETTE ARBRE 1°
019	019L04191	SEEGER ALBERO 2°	SEEGER RING SHAFT 2°	SEEGER ARBRE 2°
022	022L08222	CHIAVETTA ALBERO 2°	KEY SHAFT 2°	CLAVETTE ARBRE 2°
023	023L412	ALBERO 2°	SHAFT 2°	ARBRE 2°
023K	023LKIT	KIT ALBERO 2°	KIT SHAFT 2°	KIT ARBRE 2°
026	026L70N	GUARNIZIONE RIDUTTORE	GASKET GEAR BOX	JOINT REDUCTEUR
029	029L50292	ANELLO DI TENUTA ALBERO 2° LATO CARTER	SEAL RING SHAFT 2° CASING SIDE	JOINT ARBRE 2°
030	030L06301	SPINA CENTRAGGIO RIDUTTORE	DOWEL PIN GEAR BOX	GOUPILLE REDUCTEUR
031	031L05311	RONDELLA PER TAPPO SCARICO OLIO	WASHER FOR OIL DRAIN PLUG	RONDELLE POUR BOUCHON
032	032L0101	TAPPO SCARICO OLIO	OIL DRAIN PLUG	BOUCHON DE VIDANGE D’HUIL
034	034L55	TAPPO IMMERSIONE OLIO CON GUARNIZIONE	OIL FILLING PLUG WITH GASKET	BOUCHON D’IMMERSION D’HUIL AVEC JOINT
035	035L71353	PROTEZIONE BIELLA PLASTICA	CONNECTING ROD PLASTIC PROTECTION	PROTECTION EN PLASTIQUE BIELLE
037	037L70376	TAPPO PROTEZIONE BIELLA	PLUG PROTECTION CONNECTING ROD	BOUCHON DE PROTECTION BIELLE
039	039L05393	RONDELLA	WASHER	RONDELLE
042	042L01423	VITE SERRAGGIO MANOVELLA	BOLT CLAMPING CRANK	VIS SERRAGE MANIVELLE
043	043L321	MANOVELLA	CRANK	MANIVELLE
045	045L54	CUSCINETTO AUTOLUBRIFICATO	BEARING SELF LUBRIFICATED	ROULEMENT AUTOLUBRIFIÉ
047	047L54	COPERCHIO BIELLA	CONNECTING ROD COVER	COUVERCLE BIELLE

048	048L01484	VITE	BOLT	VIS
049	049L05495	RONDELLA	WASHER	RONDELLE
050	050L13	SUPPORTO RIDUTTORE ALLUMINIO	MOUNTING CASE ALUMINIUM	SUPPORT REDUCTEUR ALUMINIUM
051	051L01515	BULLONE FISS. SUPPORTO A CORPO POMPA	BOLT CLAMPING MOUNTING TO PUMP CASE	BOULON
052	052L05526	RONDELLA PER BULLONE	WASHER FOR BOLT	RONDELLE
053	053L25N	BIELLA RIGIDA AUTOLUBRIFICATA	RIGID CONNECTION ROD SELF-LUBRICATED	BIELLE RIGIDE AUTOLUBRIFIE’
053K	053L540	KIT BIELLA RIGIDA AUTOLUBRIFICATA	KIT RIGID CONNECTION ROD SELF-LUBRICATED	KIT BIELLE RIGIDE AUTOLUBRIFIE’
054	054L54	SPINA FISSAGGIO TESTA BIELLA AUTOLUBRIFICATA	PIN FIXING BIG END CONN.ROD SELF LUBRIFICATED	GOUPILLE FIXEGE TÊTE BIELLE AUTOLUBRIFIÉ
056	056L20561	MEMBRANA IN NEOPRENE	NEOPRENE DIAPHRAGM	MEMBRANE NEOPRENE
	056L25561	MEMBRANA IN VITON	VITON DIAPHRAGM	MEMBRANE VITON
	056L34	MEMBRANA ATOSSICA/EPDM (COMPATIBILE FDA)	EPDM/ATOXIC RUBBER DIAPHRAGM (FDA REGULATIONS)	MEMBRANE ATOXIQUE/EPDM (COMPATIBLE NORME FDA)
	056L56	MEMBRANA TPV OIL PROOF	DIAPHRAGM TPV OIL PROOF	MEMBRANE TPV OIL PROOF
058	058L01586	VITE	CAPSCREW	VIS
060	060L170	BOCCA ASPIRAZIONE FILETTATA 3" BSP ALLUMINIO	SUCTION BRANCH THREADED 3" BSP ALUMINIUM	ORIFICE D’ASPIRATION FILETE’ 3” BSP ALUMINIUM
061	061L50	CASSA D'ARIA FILETTATA POLIPROPRILENE	THREADED POLYPROPYLENE AIR CHAMBER	RESERVOIR FILETÉ POLYPROPYLENE
065	065L202	VALVOLA ASPIRAZIONE/MANDATA NEOPRENE	SUCTION/DELIVERY VALVES NEOPRENE	CLAPET NEOPRENE
	065L212	VALVOLA ASPIRAZIONE/MANDATA NBR	SUCTION/DELIVERY VALVES NBR	CLAPET NBR
	065L232	VALVOLA ASPIRAZIONE/MANDATA DUTRAL	SUCTION/DELIVERY VALVES DUTRAL	CLAPET DUTRAL
	065L244	VALVOLA ASPIRAZIONE/MANDATA GOMMA ATOSSICA (COMPATIBILE FDA)	SUCTION/DELIVERY VALVES ATOXIC RUBBER	CLAPET ATOXIQUE
	065L252	VALVOLA ASPIRAZIONE/MANDATA VITON	SUCTION/DELIVERY VALVES VITON	CLAPET VITON
	065L264	VALVOLA ASPIRAZIONE/MANDATA TPV	SUCTION/DELIVERY VALVES TPV	CLAPET TPV
067	067L90676	CUSCINETTO A SFERE PER ALBERO 2°	BEARING SHAFT 2°	ROULEMENT ARBRE 2°
068	068L108	CORPO POMPA IN ALLUMINIO	PUMP CASE ALUMINIUM	CORPS POMPE EN ALUMINIUM
076	076L190	BOCCA MANDATA FILETTATA 3" BSP ALLUMINIO	DELIVERY BRANCH THREADED 3" BSP ALUMINIUM	ORIFICE REFOULEMENT FILETE’ 3” BSP ALUMINIUM
077	077L01779	VITE PER PROTEZIONE	STUD PROTECTION	VIS POUR PROTECTION
080	080L39	TAPPO 3” BSP GHISA	3” BSP CAST IRON PLUG	BOUCHON 3" EN FONTE

	080L66	TAPPO 3” BSP INOX	3” BSP INOX PLUG	BOUCHON 3" EN INOX
088	088L307	BASE COMPLETA PER MOTORE ELETTRICO O A SCOPPIO	STATIONARY FRAME ASSY FOR PETROL ENGINE OR ELECTRIC MOTOR	CHASSIS FIXE POUR MOTEUR A ESSENCE OU ELECTRIQUE
	088L54	BASE COMPLETA A U IN AISI 304	STATIONARY FRAME ASSY AISI 304	CHASSIS FIXE EN AISI 304
140	140L3017C	CARRELLO SIMPLY LIB/1-3"	SIMPLY TRAILER LIB/1-3"	CHARIOT SIMPLY LIB/1-3"
	140L3018WE	CARRELLO PROTETTIVO CON RUOTE PNEUM.	TRAILER WRAPAROUND WITH PNEUM. WHEELS	CHASSIS POUR CADRE CHARIOT AVEC PNEUM.
160	160L271605	RUOTA PNEUMATICA CARRELLO	PNEUMATIC WHEEL FOR TRAILER	ROUE PNEUMATIQUE
162	162L3025/B	TELAIO CARRELLO PROTETTIVO	TRAILER WRAPAROUND FRAME	CHASSIS POUR CADRE CHARIOT
165	165L1B20KD350	SUPPORTO MOTORE 1B20 / KD15 350	MOTOR SUPPORT 1B20 / KD15 350	SUPPORT MOTEUR 1B20 / KD15 350
192	192L4011	PIGNONE ELICOIDALE PER MOTORE ELETTRICO RATIO 1:43 (ALBERO DIAM 24 MM)	HELICAL PINION FOR ELECTRIC MOTOR RATIO 1:43 (SHAFT DIAM 24 MM)	PIGNON HELICOIDALE POUR MOTEUR ELECTRIQUE RR 1:43 (ARBRE DIAM 24 MM)
	192L4012	PIGNONE ELICOIDALE PER MOTORE ELETTRICO RATIO 1:38 (ALBERO DIAM 24 MM)	HELICAL PINION FOR ELECTRIC MOTOR RATIO 1:38 (SHAFT DIAM 24 MM)	PIGNON HELICOIDALE POUR MOTEUR ELECTRIQUE RR 1:38 (ARBRE DIAM 24 MM)
	192L4013	PIGNONE ELICOIDALE PER MOTORE ELETTRICO RATIO 1:30 (ALBERO DIAM 24 MM)	HELICAL PINION FOR ELECTRIC MOTOR RATIO 1:30 (SHAFT DIAM 24 MM)	PIGNON HELICOIDALE POUR MOTEUR ELECTRIQUE RR 1:30 (ARBRE DIAM 24 MM)
	192L4014	PIGNONE ELICOIDALE PER MOTORE A SCOPPIO O DIESEL RATIO 1:43 (PER ALBERO DIAM 19,05 MM)	HELICAL PINION FOR GASOLINE OR DIESEL ENGINE RATIO 1:43 (FOR SHAFT DIAM 19,05 MM)	PIGNON HELICOIDALE POUR MOTEUR ESSENCE OU DIESEL RR 1:43 (POUR ARBRE DIAM 19,05 MM)
193	193L9019311	CUSCINETTO SUPPORTO PIGNONE ELICOIDALE	BEARING FOR HELICAL PINION	ROULEMENT POUR PIGNON
195	195L100	COPERCHIO RIDUTTORE ALLUMINIO ELICOIDALE	COVER GEAR BOX ALUMINIUM HELICAL	COUVERCLE REDUCTEUR EN ALUMINIUM HELICOIDALE
196	196L9019612	GABBIA A RULLI	NEEDLE BUSHING	ROULEMENT
197	197L7091	RONDELLA ALBERO 2° LATO COPERCHIO	WASHER SHAFT 2° COVER SIDE	RONDELLE
198	198L7011	RONDELLA ALBERO 1° LATO COPERCHIO	WASHER SHAFT 1° COVER SIDE	RONDELLE
199	199L4013	INGRANAGGIO ELICOIDALE ALBERO 2°	HELICAL DRIVEN SHAFT 2°	ENGRENAGE ARBRE 2°
200	200L4014	INGRANAGGIO ELICOIDALE ALBERO 1° R.R. 1:43	HELICAL DRIVEN SHAFT 1° R.R. 1:43	ENGRANAGE ARBRE 1° R.R. 1:43
	200L4015	INGRANAGGIO ELICOIDALE ALBERO 1° R.R. 1:38	HELICAL DRIVEN SHAFT 1° R.R. 1:38	ENGRANAGE ARBRE 1° R.R. 1:38
	200L4016	INGRANAGGIO ELICOIDALE ALBERO 1° R.R. 1:30	HELICAL DRIVEN SHAFT 1° R.R. 1:30	ENGRANAGE ARBRE 1° R.R. 1:30
201	201L415	ALBERO 1°	SHAFT 1°	ARBRE 1°
201K	201LKIT	KIT ALBERO 1°	KIT SHAFT 1°	KIT ARBRE 1°
202	202L7012	RONDELLA ALBERO 1° LATO CARTER	WASHER SHAFT 1° CASING SIDE	RONDELLE ARBRE 1°
204	204L100	CARTER RIDUTTORE IN ALLUMINIO	CARTER GEAR BOX ALUMINIUM	CARTER REDUCTEUR EN ALUMINIUM

205	205L7020512	TAPPO ALBERO 1° LATO CARTER	PLUG SHAFT 1° CASING SIDE	BOUCHON ARBRE 1°
206	206L3020626	GANCIO DI SOLLEVAMENTO	LIFTING HOOK	CROCHET
207	207L115N	RIDUTTORE COMPLETO ALLUMINIO DENTI ELICOIDALI RATIO 1:43 (SENZA PIGNONE)	ALUMINIUM HELICAL TEETH GEAR BOX RATIO 1:43 (WITHOUT PINION)	REDUCTEUR A DENTS HELICOIDALES RR 1:43 ALUMINIUM (SANS PIGNON)
208	208L116N	RIDUTTORE COMPLETO ALLUMINIO DENTI ELICOIDALI RATIO 1:38 (SENZA PIGNONE)	ALUMINIUM HELICAL TEETH GEAR BOX RATIO 1:38 (WITHOUT PINION)	REDUCTEUR A DENTS HELICOIDALES RR 1:38 ALUMINIUM (SANS PIGNON)
	208L117N	RIDUTTORE COMPLETO ALLUMINIO DENTI ELICOIDALI RATIO 1:30 (SENZA PIGNONE)	ALUMINIUM HELICAL TEETH GEAR BOX RATIO 1:30 (WITHOUT PINION)	REDUCTEUR A DENTS HELICOIDALES RR 1:30 ALUMINIUM (SANS PIGNON)
209	209L520917	RONDELLA PER PROTEZIONE	WASHER FOR PROTECTION	RONDELLE POUR PROTECTION
213	213L54	TESTA BIELLA AUTOLUBRIFICATA	BIG END CONNECTING ROD	TÊTE BIELLE AUTOLUBRIFIÉ
214	214L332147	MOLLA PER BIELLA	SPRING FOR CONNECTING ROD	RESSORT POUR BIELLE
215	215L502157	ANELLO IN GOMMA	INTERNAL RING	JOINT
218K	218L540I	KIT BIELLA ELASTICA AUTOLUBRIFICATA	KIT SELF LUBRIFICATED SPRING CONNECTING ROD	KIT BIELLE ELASTIQUE AUTOLUBRIFIÈ
219	219L54	PIEDE BIELLA ALLUMINIO	SMALL END OF CONNECTING ROD ALUMINIUM	PIED BIELLE
220	220L122026	PIATTELLO BLOCCAGGIO MEMBRANA ALLUMINIO	DIAPHRAGM LOOKING FLANGE ALUMINIUM	PLATEAU ALUMINIUM
221	221L122120	BULLONE STELO BIELLA	BOLT CONNECTING ROD STEM	BOULON
315	315L54	DISTANZIALE	SPACER	DISTANTIEL
316	316L54	DISTANZIALE GRANDE	GREAT SPACER	DISTANTIEL
316P	316L84	DISTANZIALE PIGNONE	PINION SPACER	PIGNON POUR ENTRETOISE
320	320L950	OR NBR PER POLMONE	OR AIR CHAMBER	OR RESERVOIR
B2	B2N07	RACCORDO MASCHIO FILETTATO M.3”X80MM	THREADED MALE 3”X80MM	RACCORD MALE FILETE’ 3” X 80MM
B4	B2R02	RACCORDO FEMMINA PORTAGOMMA Ø80MM	FEMALE WITH SPIGOT Ø80MM	RACCORD FEMELLE Ø80MM
B5	B2E02	FILTRO PESCANTE ZINCATO Ø80MM	GALVANIZED STRAINER Ø80MM	CREPINE Ø80MM
B7	B2R09	RACCORDO MASCHIO PORTAGOMMA Ø80MM	MALE WITH SPIGOT Ø80MM	RACCORD MALE Ø80MM
TL015	TL015/4	PRIGIONIERI FISSAGGIO BOCCHE / BASE	FASTENING BOLT BRANCHES / BASE	BOULON FIXAGE ORIFICE / BASE
TL045	TL045/S	SILENT BLOCK	SILENT BLOCK	SILENT BLOCK

NOTES

Caffini Cipriano s.r.l.
Via G. di Vittorio, 46 – 43044
Lemignano di Collecchio (Parma) – Italy
phone +39 0521 804325 **web** www.caffinipumps.it
e-mail info@caffinipumps.it

Caffini PUMPS
place & forget