LIBELLULA 1-4”

SELF PRIMING DIAPHRAGM PUMP

IT – CATALOGO RICAMBI

EN – SPARE PARTS LIST

FR – LISTE DES PIECES DE RECHANGE

Caffini PUMPS

place & forget

GEAR BOX ASSEMBLY 1:31 FOR ELECTRIC MOTOR

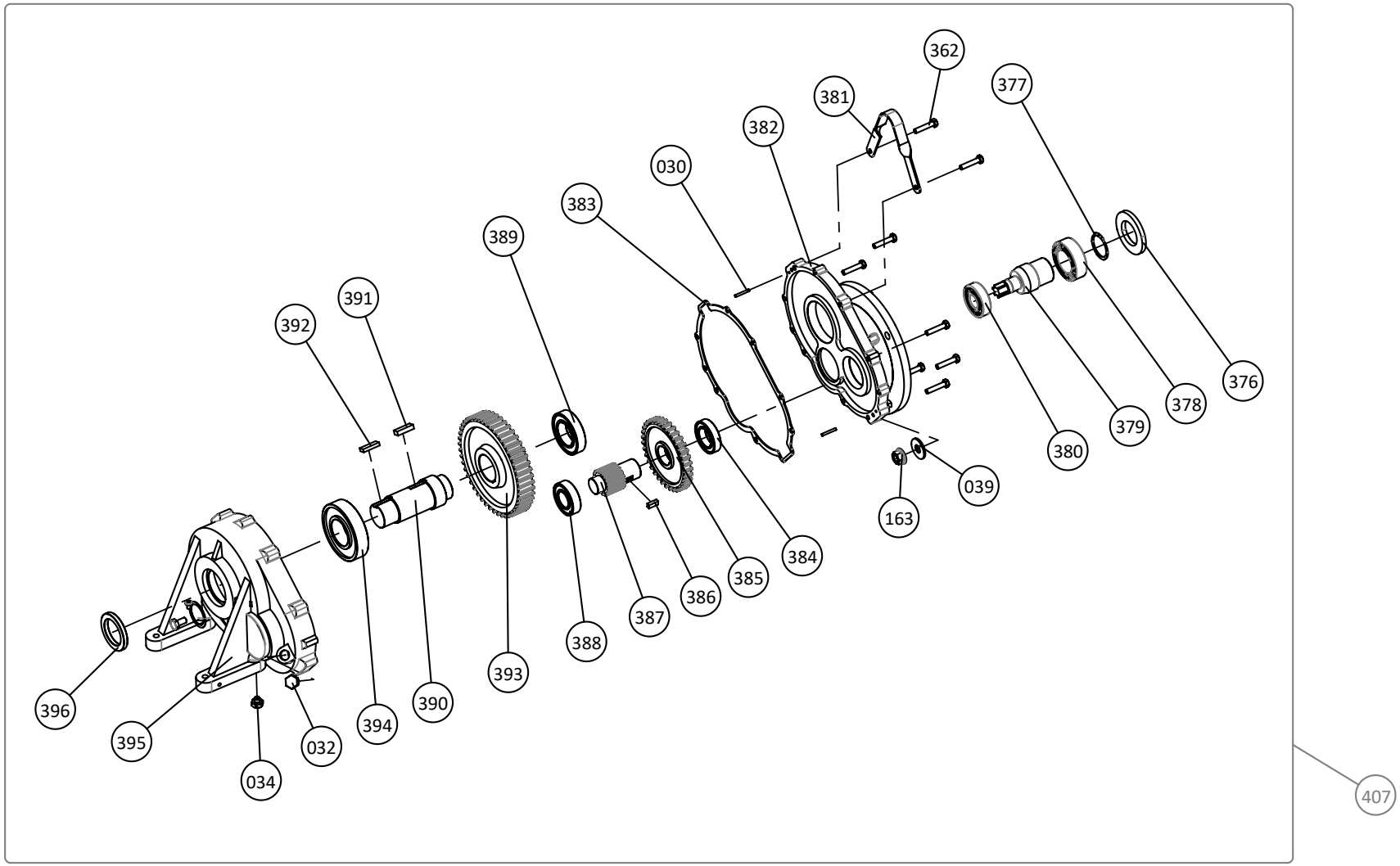

GEAR BOX ASSEMBLY 1:55 FOR PETROL OR DIESEL ENGINE

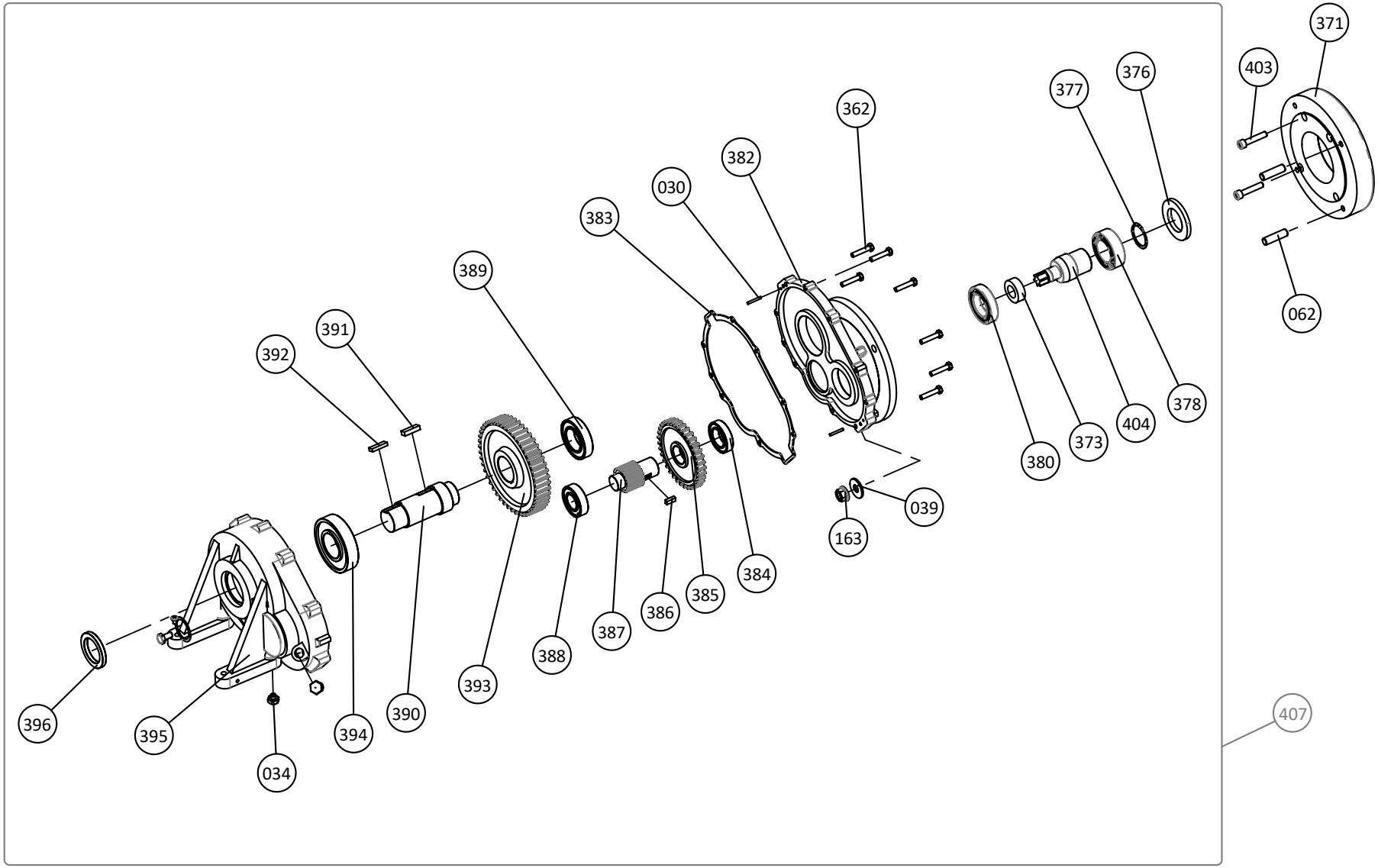

NON-WETTED PARTS ASSEMBLY

NON-SELF LUBRICATING CONNECTION ROD

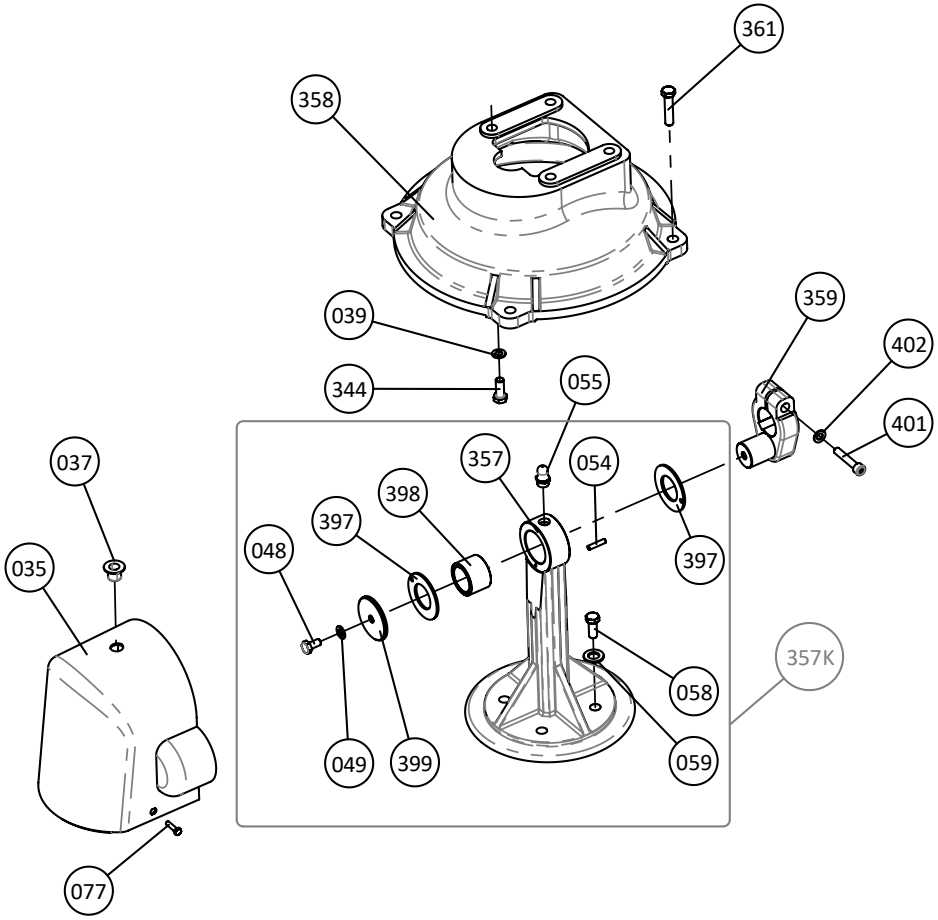

NON-WETTED PARTS ASSEMBLY

SELF LUBRICATING CONNECTION ROD

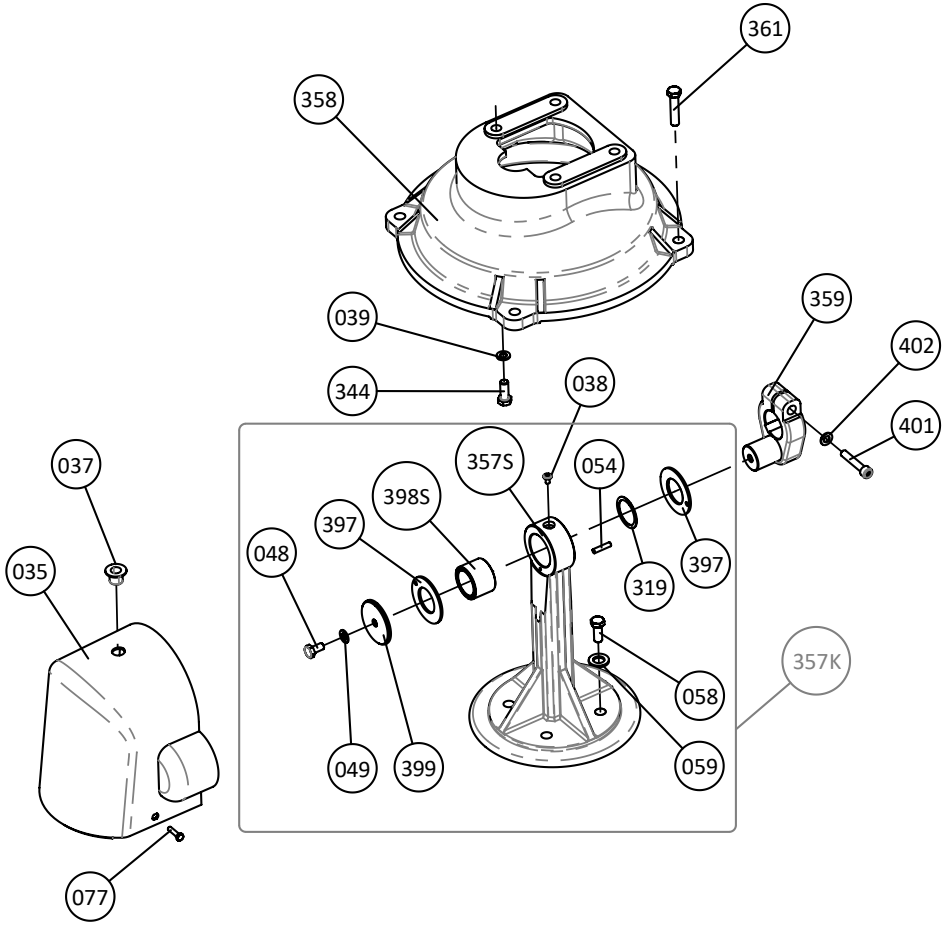

WETTED PARTS ASSEMBLY

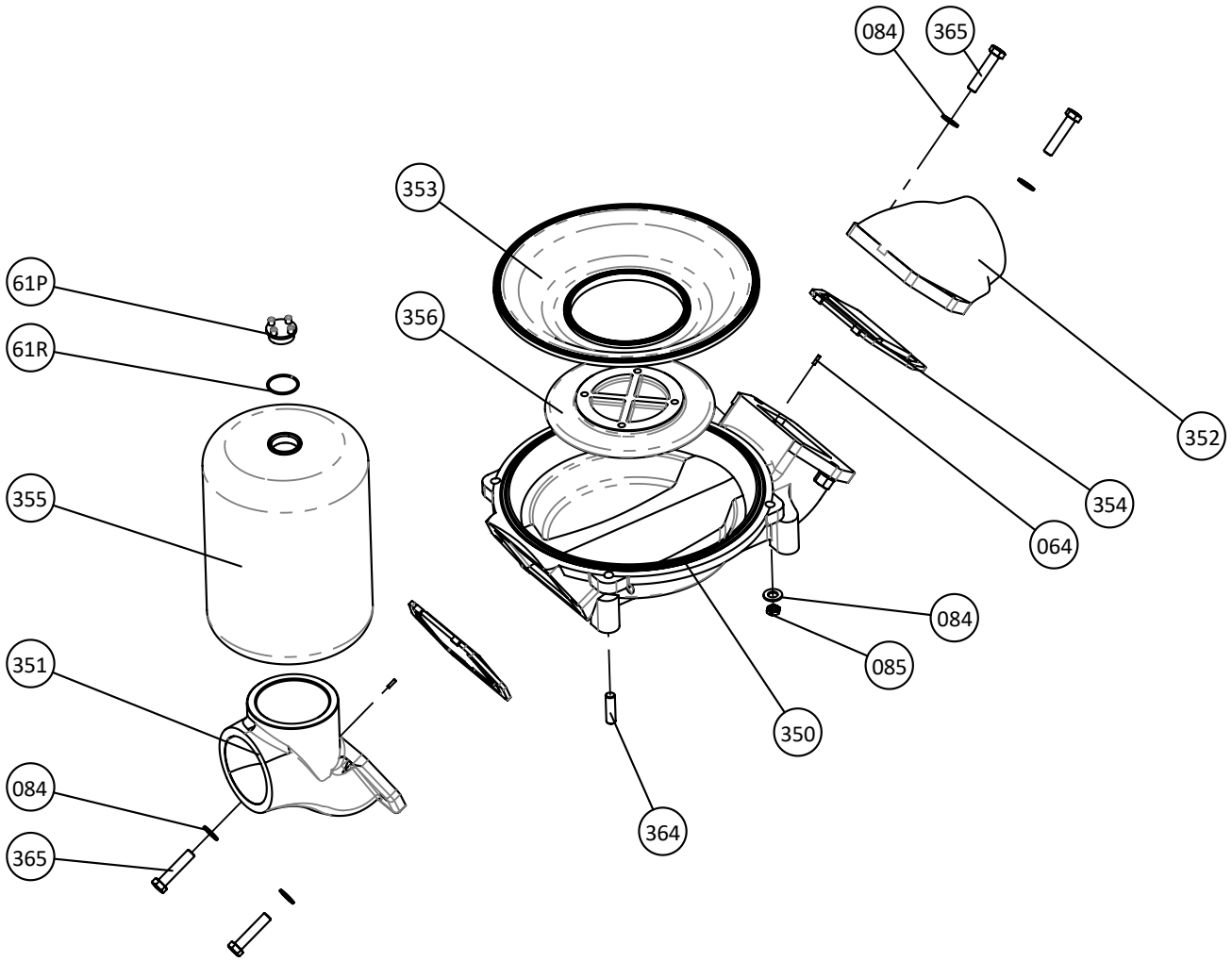

BASE FOR ELECTRIC MOTOR

367L15E

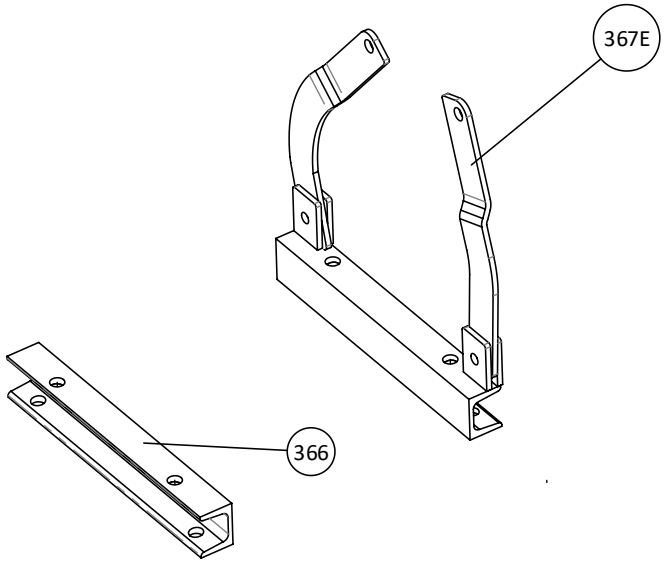

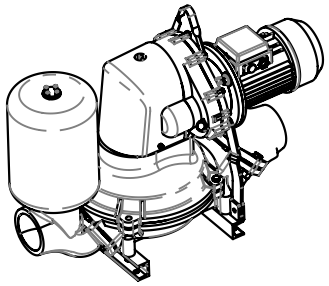

WRAPAROUND TRAILER FOR ELECTRIC MOTOR

367L54/TPH

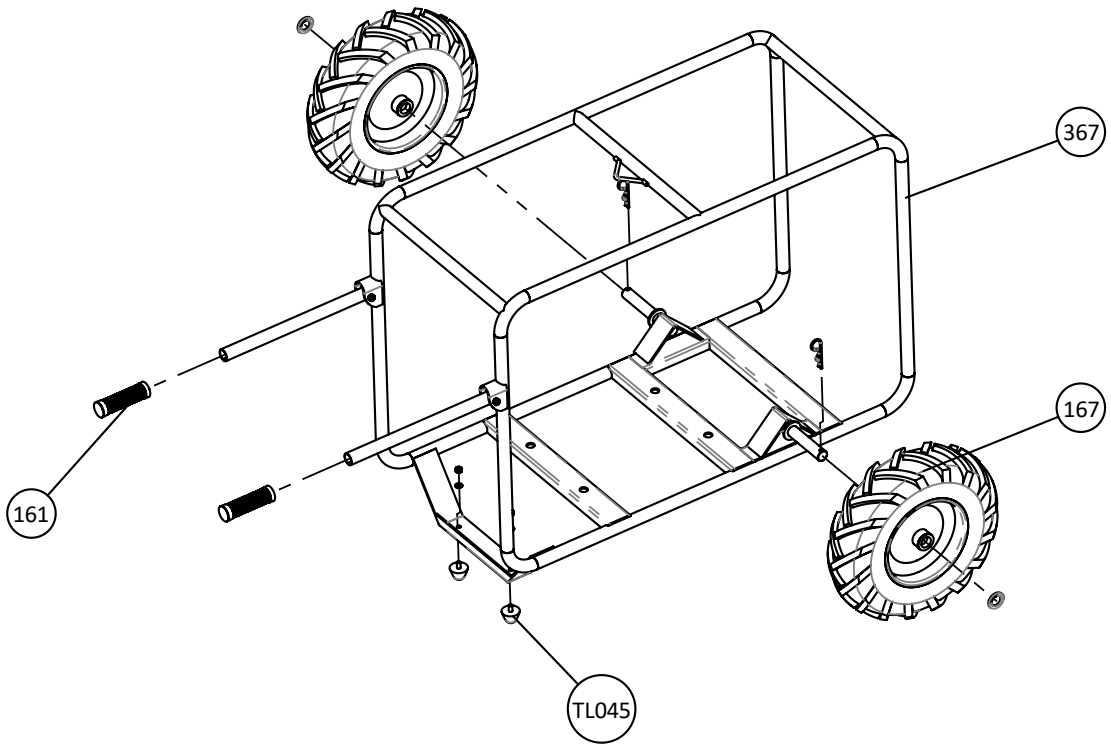

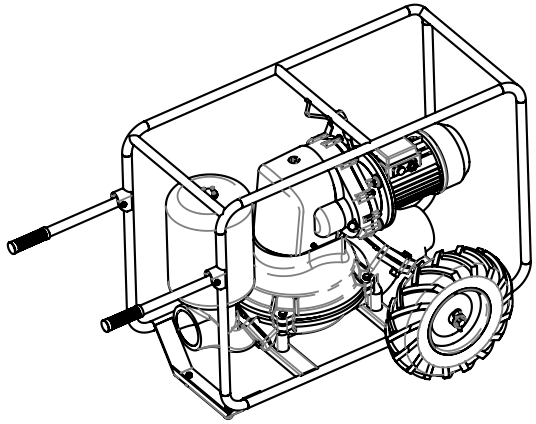

WRAPAROUND TRAILER FOR PETROL OR DIESEL ENGINE

367L54/GX270 / 367L54 / 367L55

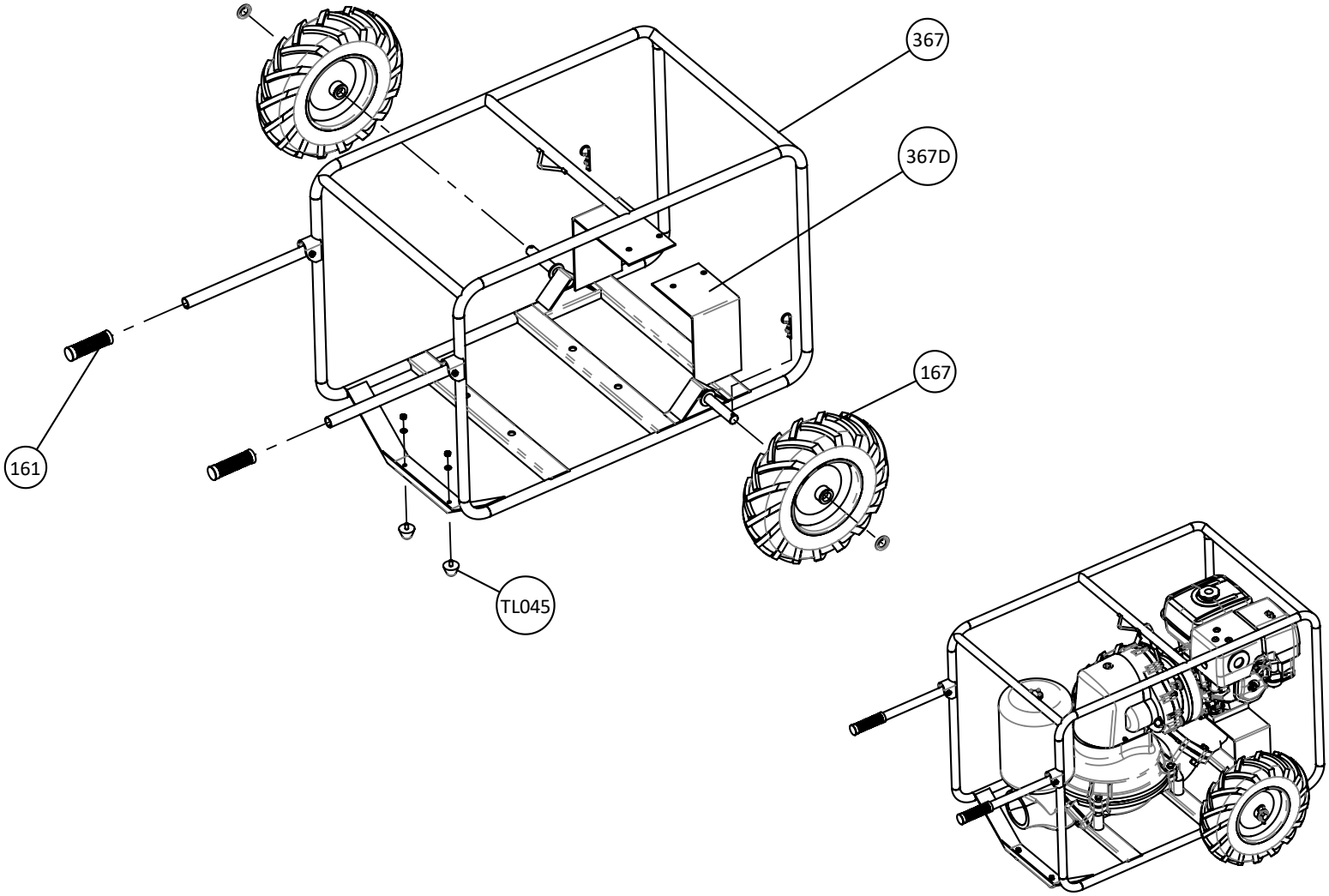

ACCESSORIES

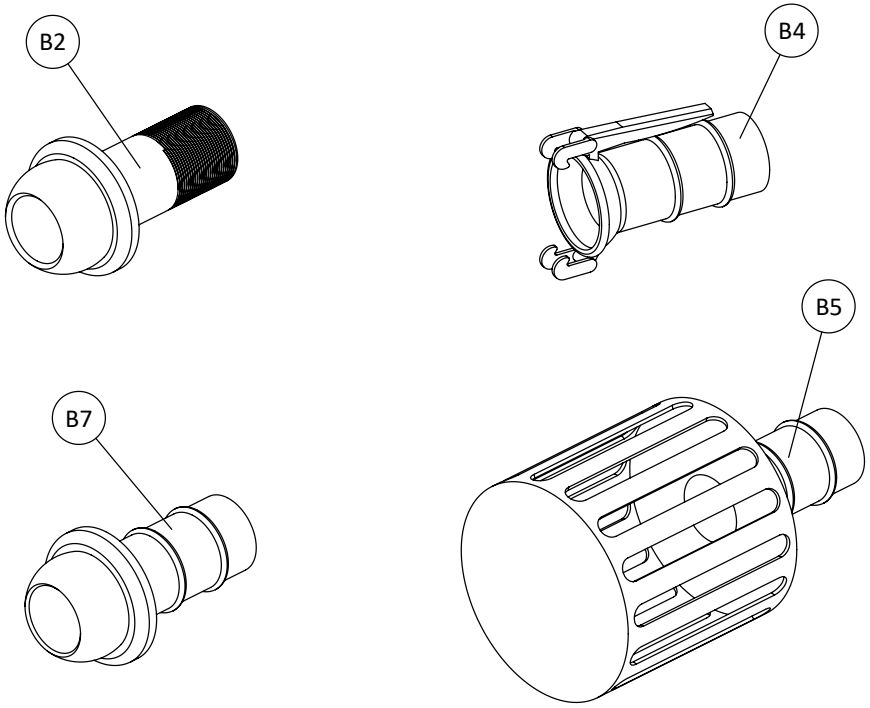

SPARE PARTS LIST

FIG	PART NUMBER	DENOMINAZIONE	DESCRIPTION	DESCRIPTION
030	030L06301	SPINA CENTRAGGIO RIDUTTORE	DOWEL PIN GEAR BOX	GOUPILLE
034	034L56	TAPPO IMMERSIONE OLIO CON GUARNIZIONE	OIL FIELD PLUG W/GASKET	BOUCHON AVEC JOINT
035	035L71353	PROTEZIONE BIELLA PLASTICA	PLASTIC PROTECTION	PROTECTION EN PLASTIQUE
037	037L70376	TAPPO PER PROTEZIONE IN PLASTICA	PLUG FOR PLASTIC PROTECTION	BOUCHON
038	038L10	VITE	SCREW	VIS
039	039L05393	RONDELLA	WASHER	RONDELLE
048	048L01484	BULLONE T.E. FISSAGGIO COPERCHIO BIELLA	BOLT CLAMPING COVER	BOULON
049	049L05495	RONDELLA PER BULLONE	WASHER FOR BOLT	RONDELLE
054	054L06542	SPINA FISSAGGIO TESTA BIELLA	DOWEL PIN WASHER	GOUPILLE
055	055L33552	INGRASSATORE	GREASE NIPPLE	GRASSEUR
058	058L01586	BULLONE FISSAGGIO MEMBRANA	BOLT FASTENING DIAPHRAGM	BOULON
059	059L05597	RONDELLA PER BULLONE	WASHER FOR BOLT	RONDELLE
61R	061L43	O RING PER TAPPO IN BRONZO	O RING FOR BRONZE PLUG	O RING POUR BRONZE BOUCHON
61P	061L44	TAPPO IN BRONZO 1”	1” BRONZE PLUG	BOUCHON 1” EN BRONZE
062	062L01628U	PRIGIONIERO FISSAGGIO FLANGIA MOTORE	STUD FASTENING MOTOR ADAPTER	GOUJON BRIDE MOTEUR
064	064L06643	SPINA FISSAGGIO BOCCHE	DOWEL PIN FOR BRANCHES	EPINE POUR ORIFICES
070	070L01708	PRIGIONIERO FISSAGGIO BASE A POMPA	STUD FASTENING PUMP CASE	GOUJON
077	077L01779	VITE FISSAGGIO PROTEZIONE	SCREW FASTENING PROTECTION	VIS
078	078L31782	PIASTRINA PER PROTEZIONE	PLATE FOR PROTECTION	PLAQUE POUR PROTECTION
084	084L05849	RONDELLA	WASHER	RONDELLE
085	085L07851	DADO	NUT	ECROU
161	161L281611	MANOPOLA	KNOB	POIGNÉE
163	163L71637	DADO	NUT	ECROU

167	167L271674	RUOTA PNEUMATICA TRACTOR	PNEUMATIC WHEEL TRACTOR TYPE	ROUE PNEUMATIQUE TRACTOR
319	319L57	DISTANZIALE BIELLA PER BOCCOLA AUTOLUBRIFICATA	SPACER FOR SELF-LUBRICATING BUSHING	ENTRETOISE DE BIELLE POUR BAGUE AUTOLUBRIFIANTE
344	344L13441	BULLONE	BOLT	BOULON
345	345L13451	BULLONE	BOLT	BOULON
350	350L11	CORPO POMPA ALLUMINIO	PUMP CASE ALUMINIUM	CORPE POMPE ALUMINIUM
	350L13	CORPO POMPA GHISA	PUMP CASE CAST IRON	CORPE POMPE FONTE
	350L20	CORPO POMPA RIVESTITO RILSAN ATOSSICO	PUMP CASE ATOXIC RILSAN COATED	CORPE POMPE PLASTIFIE’ RILSAN ATOXIQUE
351	351L11	BOCCA ASPIRAZIONE FIL 4” BSP ALLUMINIO	SUCTION BRANCH THREAD 4”BSP ALUMINIUM	ORIFICE ASPIRATION FILETE’ 4”BSP ALUMINIUM
	351L103	BOCCA ASPIRAZIONE FIL. 4” BSP GHISA	SUCTION BRANCH THREAD 4”BSP CAST IRON	ORIFICE ASPIRATION FILETE’ 4”BSP FONTE
	351L106	BOCCA ASPIRAZIONE FLG DIA100PN10 ALLUMINIO	SUCTION BRANCH FLANGED DIA100PN10 ALUMINIUM	ORIFICE ASPIRATION A BRIDE DIA100PN10 ALUMINIUM
	351L114	BOCCA ASPIRAZ. FLG DIA100PN10 RIVESTITA RILSAN ATOSSICO	SUCTION BRANCH FLANGED DIA100PN10 ATOXIC RILSAN COATED	ORIFICE ASPIRATION A BRIDE DIA100PN10 PLASTIFIE’RILSAN ATOXIQUE
352	352L11	BOCCA MANDATA FIL. 4”BSP ALLUMINIO	DELIVERY BRANCH THREAD 4” BSP ALUMINIUM	ORIFICE REFOULEMENT FILETE’ 4”BSP ALUMINIUM
	352L103	BOCCA MANDATA FIL. 4” BSP GHISA	DELIVERY BRANCH THREAD 4” BSP CAST IRON	ORIFICE REFOULEMENT FILETE’ 4”BSP FONTE
	352L106	BOCCA MANDATA FLG. DIA100PN10 ALLUMINIO	DELIVERY BRANCH FLANGED DIA100PN10 ALUMINIUM	ORIFICE REFOULEMENT A BRIDE DIA100PN10 ALUMINIUM
	352L311	BOCCA MANDATA FLG. DIA100PN10 RIVESTITA RILSAN ATOSSICO	DELIVERY BRANCH FLANGED DIA100PN10 ATOXIC RILSAN COATED	ORIFICE REFOULEMENT A BRIDE DIA100PN10 PLASTIFIE’ RILSAN ATOXIQUE
353	353L13536	MEMBRANA VITON	VITON DIAPHRAGM	MEMBRANE VITON
	353L13538	MEMBRANA TPV DUTRAL/ATOSSICA COMPATIBILE FDA	TPV DUTRAL/ATOSSICA DIAPHRAGM FDA COMPATIBLE	MEMBRANE TPV DUTRAL/ATOXIQUE COMPATIBLE FD
	353L13539	MEMBRANA VITON COMPATIBILE FDA	VITON DIAPHRAGM FDA COMPATIBLE	MEMBRANE VITON COMPATIBLE FDA
	353L56	MEMBRANA TPV NERA	TPV DIAPHRAGM BLACK	MEMBRANE TPV NOIRE
354	354L11	VALVOLA NEOPRENE	NEOPRENE VALVE	CLAPET NEOPRENE
	354L12	VALVOLA NBR	NITRILIC RUBBER VALVE	CLAPET NBR (NITRILIQUE)
	354L13	VALVOLA HYPALON	HYPALON VALVE	CLAPET HYPALON
	354L14	VALVOLA DUTRAL	DUTRAL VALVE	CLAPET DUTRAL
	354L16	VALVOLA VITON	VITON VALVE	CLAPET VITON
	354L44	VALVOLA ATOSSICA COMPATIBILE FDA	ATOXIC VALVE COMPATIBLE FDA	CLAPET ATOXIQUE COMPATIBLE FDA

355	355L1064	CASSA D’ARIA FILETTATA NASTRO ACCIAIO	AIR CHAMBER THREADED STEEL STRIP	CHAMBRE A AIR FILETE’ ACIER
	355L17	CASSA D’ARIA FLANGIATA RIVESTITA RILSAN SENZA TAPPO 1”	AIR CHAMBER FLANGED RILSAN COATED WITHOUT 1” PLUG	CHAMBRE A AIR A BRIDE PLASTIFIE’ RILSAN SANS BOUCHON
	355L13552	TAPPO FILETTATO 4”BSP GHISA	CAST IRON 4”BSP THREADED PLUG	BOUCHON FILETE’ 4”BSP EN FONTE
	355L194	TAPPO FLANGIATO IN GHISA	CAST IRON FLANGED PLUG	BOUCHON A BRIDE FONTE
356	356L13	FLANGIA BLOCCAGGIO MEMBR. GHISA	DIAPHRAGM LOOKING FLANGE CAST IRON	PLATEAU EN FONTE
	356L20	FLANGIA BLOCCAGGIO MEMBR. RIVESTITA RILSAN ATOSSICO	DIAPHRAGM LOOKING FLANGE ATOXIC RILSAN COATED	PLATEAU PLASTIFIE’ RILSAN ATOXIQUE
357	357L13	BIELLA IN GHISA	CAST IRON CONNECTING ROD	BIELLE EN FONTE
357S	357L20	BIELLA IN GHISA AUTO-LUBRIFICATA	SELF LUBRICATING CONNECTION ROD	BIELLE EN FONTE AUTOLUBRIFIÉ
357K	357L13R	KIT BIELLA IN GHISA	KIT CAST IRON CONNECTING ROD	KIT BIELLE EN FONTE
	357L20R	KIT BIELLA IN GHISA AUTO-LUBRIFICATA	KIT SELF LUBRICATING CONNECTION ROD	KIT BIELLE EN FONTE AUTOLUBRIFIÉ
358	358L13	SUPPORTO RIDUTTORE GHISA	MOUNTING CASE CAST IRON	SUPPORT REDUCTEUR EN FONTE
359	359L11	MANOVELLA	CRANK	MANIVELLE
361	361L13611	BULLONE	BOLT	BOULON
362	362L13621	BULLONE	BOLT	BOULON
364	364L13641U	PRIGIONIERO	STUD	GOUJON
365	365L13651	BULLONE	BOLT	BOULON
366	366L03661	BASE A U IN ACCIAIO PER MOTORE ELETTRICO	U-SKID STEEL BASE FOR ELECTRIC MOTOR	U-CHASSIS EN FER POUR MOTEUR ELECTRIQUE
	366L11/INOX	BASE A U IN INOX PER MOTORE ELETTRICO	U-SKID INOX BASE FOR ELECTRIC MOTOR	U-CHASSIS EN INOX POUR MOTEUR ELECTRIQUE
367	367L0056	STRUTTURA CARRELLO PROTETTIVO	WRAPAROUND TRAILER FRAME	CHASSIS CADRE DE PROTECTION
367D	367L1B30KD350	SUPPORTO MOTORE 1B30 / KD15 350	1B30 / KD15 350 ENGINE SUPPORT	SUPPORT DE MOTEUR 1B30 / KD15 350
367E	367L15E	SUPPORTO MOTORE ELETTRICO	ELECTRIC MOTOR SUPPORT	SUPPORT MOTEUR ÉLECTRIQUE
	367L54	CARRELLO PROTETTIVO CON RUOTE PNEUMATICHE PER POMPA CON MOTORE DIESEL HATZ 1B30	WRAPAROUND WITH PNEUMATIC WHEELS FOR PUMP WITH DIESEL ENGINE HATZ 1B30	CADRE DE PROTECTION AVEC ROUES PNEUMATIQUES POUR POMPE AVEC MOTEUR DIESEL HATZ 1B30
	367L54/GX270	CARRELLO PROTETTIVO CON RUOTE PNEUMATICHE PER MOTORE HONDA GX270	WRAPAROUND WITH PNEUMATIC WHEELS FOR PETROL ENGINE HONDA GX270	CADRE DE PROTECTION AVEC ROUES PNEUMATIQUES POUR MOTEUR HONDA GX270
	367L54/TPH	CARRELLO PROTETTIVO CON RUOTE PNEUMATICHE PER MOTORE ELETTRICO	WRAPAROUND WITH PNEUMATIC WHEELS FOR ELECTRIC MOTOR	CADRE DE PROTECTION AVEC ROUES PNEUMATIQUES POUR MOTEUR ELECTRIQUE

	367L55	CARRELLO PROTETTIVO CON RUOTE PNEUMATICHE PER MOTORE DIESEL KOHLER KD15 350	WRAPAROUND WITH PNEUMATIC WHEELS FOR DIESEL KOHLER KD15 350	CADRE DE PROTECTION AVEC ROUES PNEUMATIQUES POUR MOTEUR DIESEL KOHLER KD15 350
371	371L17	FLANGIA ACCOPPIAMENTO SAE609 B – ALBERO 1" PER MOTORI HATZ/KOHLER/HONDA	ADAPTER COUPLING SAE 609 B – 1" SHAFT FOR HATZ/KOHLER/HONDA	BRIDE SAE609B – ARBRE 1" POUR HATZ/KOHLER/HONDA
	371L18	FLANGIA ACCOPPIAMENTO KOHLER KD 15 350 AVVIAMENTO ELETTRICO	ADAPTER COUPLING KOHLER KD15 350 ELECTRIC STARTER	BRIDE COUPLEMENT KOHLER KD 15 350 DEMARRAGE ELECTRIQUE
373	373L13731	BOCCOLA PER PIGNONE 1/55	INTERNAL RING FOR PINION 1/55	BOITE DE GRAISSE PIGNON 1/55
374	374L12	INGRANAGGIO 1/55	GEAR 1/55	ENGRENAGE 1/55
376	376L13761	PARAOLIO	OIL SEAL RING	JOINT
377	377L13771	SEEGER	SEEGER	SEEGER
378	378L13781	CUSCINETTO	BEARING	ROULEMENT
379	379L12	PIGNONE 1/31 D.28mm MOTORE ELETTRICO 3 KW FORMA 100	PINION 1/31 D.28 mm. ELECTRIC MOTOR E. SIZE 100 3 KW	PIGNON 1/31 D.28 mm POUR MOTEUR ELECTRIQUE 3 KW FORME 100
	379L14	PIGNONE 1/31 D.25,4mm PER MOTORE DIESEL	PINION 1/31 D.25,4 mm FOR DIESEL ENGINE	PIGNON 1/31 D.25,4mm POUR MOTEUR DIESEL
380	380L13801	CUSCINETTO	BEARING	ROULEMENT
381	381L13811	GANCIO SOLLEVAMENTO	LIFTING HOOK	CROCHET
382	382L11	COPERCHIO RIDUTTORE ALLUMINIO	COVER REDUCTION GEAR ALUMINIUM	COUVERCLE REDUCTEUR ALUMINIUM
383	383L13831	GUARNIZIONE	GASKET	JOINT
384	384L13841	CUSCINETTO	BEARING	ROULEMENT
385	385L11	INGRANAGGIO 1/31	GEAR 1/31	ENGRENAGE 1/31
386	386L13861	CHIAVETTA	KEY	CLAVETTE
387	387L11	ALBERO CON INGRANAGGIO PER RATIO 1/31	SHAFT WITH GEAR FOR RATIO 1/31	ARBRE AVEC ENGRENAGE POUR RATIO 1/31
	387L12	ALBERO CON INGRANAGGIO PER RATIO 1/55	SHAFT WITH GEAR FOR RATIO 1/55	ARBRE AVEC ENGRENAGE POUR RATIO 1/55
388	388L13881	CUSCINETTO	BEARING	ROULEMENT
389	389L11	CUSCINETTO	BEARING	ROULEMENT
390	390L11	ALBERO	SHAFT	ARBRE
391	391L13911	CHIAVETTA	KEY	CLAVETTE
392	392L13921	CHIAVETTA	KEY	CLAVETTE
393	393L11	INGRANAGGIO PER RATIO 1/31	GEAR FOR RATIO 1/31	ENGRENAGE POUR RATIO 1/31

393	393L12	INGRANAGGIO PER RATIO 1/55	GEAR FOR RATIO 1/55	ENGRENAGE POUR RATIO 1/55
394	394L13941	CUSCINETTO	BEARING	ROULEMENT
395	395L11	CARTER RIDUTTORE ALLUMINIO	GEAR BOX CASE ALUMINIUM	CARTER REDUCTEUR ALUMINIUM
396	396L13961	PARAOLIO	OIL SEAL RING	JOINT
397	397L11	RONDELLA	WASHER	RONDELLE
398	398L13981	GABBIA A RULLI	NEEDLE BUSHING	ROULEMENT
398S	398L54	BOCCOLA AUTOLUBRIFICATA	SELF-LUBRICATING BUSHING	DOUILLE AUTOLUBRIFIÉ
399	399L13991	COPERCHIO BIELLA	CONNECTING ROD COVER	COUVERCLE BIELLE
401	401L14011	BULLONE PER MANOVELLA	BOLT FOR CRANK	BOULON POUR MANIVELLE
402	402L14021	RONDELLA	WASHER	RONDELLE
403	403L20	VITE FISSAGGIO FLANGIA A MOTORE (HATZ)	MOTOR FLANGE FASTENING SCREW (HATZ)	VIS DE FIXATION DE LA BRIDE SUR LE MOTEUR (HATZ)
	403L21	VITE FISSAGGIO FLANGIA A MOTORE (HONDA/KOHLER)	MOTOR FLANGE FASTENING SCREW (HONDA/KOHLER)	VIS DE FIXATION DE LA BRIDE SUR LE MOTEUR (HONDA/KOHLER)
404	404L12	PIGNONE 1/55 D. 25,4 mm. PER MOTORE A SCOPPIO O DIESEL	PINION 1/55 D. 25,4 mm. FOR PETROL OR DIESEL ENGINE	PIGNON 1/55 D.25,4 mm POUR MOTEUR A ESSENCE OU DIESEL
407	407L11	RIDUTTORE 1/31 ALLUMINIO PER MOTORE DIESEL ALBERO 25,4mm	ALUMINIUM GEAR BOX ASSY 1/31 FOR DIESEL ENGINE SHAFT 25,4mm	REDUCTEUR COMPLETE 1/31 ALUMINIUM POUR MOTEUR DIESEL ARBRE 25,4mm
	407L12	RIDUTTORE 1/31 ALLUMINIO PER MOTORE ELETTRICO ALBERO 28mm	ALUMINIUM GEAR BOX ASSY 1/31 FOR ELECTRIC ENGINE SHAFT 28mm	REDUCTEUR COMPLETE 1/31 ALUMINIUM POUR MOTEUR ELECTRIQUE ARBRE 28mm
	407L17	RIDUTTORE 1/55 ALLUMINIO PER MOTORI A 3000 RPM HATZ/KOHLER/HONDA CON ALBERO D. 25,4 mm.	ALUMINIUM GEARBOX ASSY 1/55 FOR ENGINES AT 3000 RPM HATZ/KOHLER/HONDA WITH SHAFT D. 25, 4 mm.	REDUCTEUR COMPLETE 1/55 POUR MOTEURES A 3000 T/M HATZ/KOHLER/HONDA AVEC ARBRE D.25,4 mm
B2	B2N08	RACCORDO MASCHIO FILETTATO M.4”X100MM	THREADED MALE 4”X100MM	RACCORD MALE FILETE’ 4”X100MM
B4	B2R03	RACCORDO FEMMINA PORTAGOMMA Ø100MM	FEMALE WITH SPIGOT Ø100MM	RACCORD FEMELLE Ø100MM
B5	B2E03	FILTRO PESCANTE ZINCATO Ø100MM	GALVANIZED STRAINER Ø100MM	CREPINE Ø100MM
B7	B2R10	RACCORDO MASCHIO PORTAGOMMA Ø100MM	MALE WITH SPIGOT Ø80MM	RACCORD MALE Ø80MM
TL045	TL045/S	SILENT BLOCK	SILENT BLOCK	SILENT BLOCK
TL054	TL054/0	BULLONE	BOLT	BOULON

NOTES

Caffini Cipriano s.r.l.
Via G. di Vittorio, 46 – 43044
Lemignano di Collecchio (Parma) – Italy
phone +39 0521 804325 **web** www.caffinipumps.it
e-mail info@caffinipumps.it

Caffini PUMPS
place & forget